AXISYMMETRIC BUCKLING OF ANNULAR SANDWICH PANELS

By

AMELIO JOHN AMATO

A DISSERTATION PRESENTED TO THE GRADUATE COUNCIL OF
THE UNIVERSITY OF FLORIDA
IN PARTIAL FULFILLMENT OF THE REQUIREMENTS FOR THE
DEGREE OF DOCTOR OF PHILOSOPHY

UNIVERSITY OF FLORIDA

1970

University of Florida
1853

UNIVERSITY OF FLORIDA
3 1262 08552 2943

To my wife,

Carol

ACKNOWLEDGMENTS

The author wishes to express his appreciation to the members of his supervisory committee: to Dr. I. K. Ebcioglu, chairman, who originally suggested the topic and, through his constant guidance and encouragement, made this work possible; to Drs. S. Y. Lu, V. H. Kurzweg, M. A. Eisenberg, and E. H. Hadlock for their helpful discussions with the author and many valuable suggestions.

The author also wishes to express his thanks to the NDEA Title IV program for the financial support accorded to him.

Finally, the author wishes to thank his wife, Carol, without whose patience, understanding and encouragement he would not have been able to complete this task.

TABLE OF CONTENTS

	Page
ACKNOWLEDGMENTS	iii
LIST OF TABLES	vi
LIST OF FIGURES	vii
KEY TO SYMBOLS	viii
ABSTRACT	xi
CHAPTER	
I. INTRODUCTION	1
II. BASIC CONCEPTS	6
1. Description of Sandwich Panel and Notations	6
2. Displacements	8
3. Strain-Displacement Relations	9
4. Stress-Strain Relations	10
5. Stress Resultants	12
III. DERIVATION OF EQUATIONS IN CARTESIAN COORDINATES	14
1. Total Potential	14
2. Theorem of Minimum Potential Energy	16
3. Equilibrium Equations and Boundary Conditions	19
4. Simplification of Equations	22
IV. EQUILIBRIUM EQUATIONS AND BOUNDARY CONDITIONS IN CYLINDRICAL COORDINATES	25
1. Application of Covariant Derivatives	25
2. Transformation of Equations	30
3. Axial Stress Distribution	32
4. Reduced Equilibrium Equations	35
5. Boundary Conditions	38
6. Comparison with Other Theories	39

TABLE OF CONTENTS (Continued)

CHAPTER		Page
V.	AXISYMMETRIC BUCKLING OF ANNULAR SANDWICH PANELS	42
	1. Uniform Axial Stress Distribution	42
	2. General Solution	46
	3. Successive Approximations	53
	4. Numerical Results and Discussions	60
	5. Error Bound	66
	6. Remarks on Convergence	68
VI.	CONCLUSION	71
BIBLIOGRAPHY	. . . . .	73
BIOGRAPHICAL SKETCH	. . . . .	75

LIST OF TABLES

Table		Page
1.	Comparison of Equations Governing Stability of Single-Layer Panels and Sandwich Panels	40
2.	Lowest Value of μ Satisfying Equation (86)	44
3.	Approximate Values of $(N_o/A)_{cr}$ for $\xi = 0$	67

LIST OF FIGURES

Figure		Page
1.	Element of Sandwich Panel	7
2.	Annular Sandwich Panel	34
3.	Minimum Critical Values of (N_o/A) for $N_o = N_i$	63
4.	Minimum Critical Values of (N_o/A) for $N_i = 0$	64
5.	Radius of Convergence	68

KEY TO SYMBOLS

V_α, V_3	= Displacements
u_α, ψ_α, w	= Displacement components
x, y, z	= Cartesian coordinates
z', z''	= Coordinates, defined by equation (1)
t_c, t_f	= Thicknesses of core and faces, respectively
$'$, $''$	= Superscripts indicating the lower and upper face quantities, respectively
$\hat{t}$	= $(t_c + t_f)/t_c$
$\mathcal{V}$	= Total potential
U_c, U_f	= Strain energies
W_q, W_N, W_M	= Work performed by external forces and moments
α, β, γ, μ	= Indices taking on values x or y
i, j, k	= Indices taking on values x, y or z
e_{ij}, $e_{\alpha\beta}$, $e_{\alpha 3}$, e_{33}	= Components of strain
τ_{ij} $\tau_{\alpha\beta}$ $\tau_{\alpha 3}$ τ_{33}	= Components of stress
G_c	= Shear modulus of the core
ν_f	= Poisson's ratio of the face
E_f	= Young's modulus of the face
D_f	= Bending rigidity of the face
$A_{\alpha\beta\gamma\mu}$	$= [(1-\nu_f)/2]\left[\delta_{\alpha\mu}\delta_{\beta\gamma} + \delta_{\alpha\gamma}\delta_{\beta\mu} + [(2\nu_f)/(1-\nu_f)]\delta_{\alpha\beta}\delta_{\gamma\mu}\right]$
$\delta_{\alpha\beta}$	= Kronecker delta
$N_{\alpha\beta}$	= Pre-buckling axial forces per unit length

q	= Lateral load per unit area
$\underline{M}_{\alpha\beta}$	= Externally applied moment per unit length
Q_α	= Transverse shear forces per unit length
$M_{\alpha\beta}$	= Bending moments per unit length
$N_{\alpha\beta}$	= Axial forces per unit length corresponding to small deformations during buckling
(n)	= Bracketed index indicating physical component of a tensor
$\left\{ {\ell \atop nq} \right\}$	= Christoffel symbol of the second kind
x^q	= General coordinate variable
n, ℓ, q, s, t, m, p	= Indices taking on values 1, 2 and 3
$g^{\ell m}$, $g_{\ell m}$	= Metric tensor
X_n, Y_n^s	= Arbitrary tensors
r, θ	= Polar coordinates
∇^2	= Laplacian operator
$\bar{u}$	= Pre-buckling lateral displacement of middle plane of faces
u	= Lateral displacement of middle plane of faces for axisymmetric equations
N_i, N_o	= Compressive axial forces per unit length applied to inner and outer edges, respectively
a, b	= Inner and outer radii of annular panel, respectively
β	= a/b
D, E	= Defined by equation (65)
φ	= $\frac{dw}{dr}$
F, G, H, I	= Defined by equation (72)

A, B	= Defined by equation (73)
η	= r/b
N, R, Q	= Defined by equation (94)
ξ	= $\eta - 1$
A_k	= Coefficients of power series
μ	= Buckling coefficient for uniform axial stress distribution
C_1	= Arbitrary constant of integration
J_1, Y_1	= Bessel functions of order one
ρ	= Radius of convergence

Abstract of Dissertation Presented to the
Graduate Council of the University of Florida in Partial Fulfillment
of the Requirements for the Degree of Doctor of Philosophy

AXISYMMETRIC BUCKLING OF ANNULAR
SANDWICH PANELS

By

Amelio John Amato

June, 1970

Chairman: Dr. Ibrahim K. Ebcioglu
Major Department: Engineering Science and Mechanics

The buckling of an annular sandwich panel is investigated using the theorem of minimum potential energy. Governing equations, derived in cartesian coordinates, are transformed into cylindrical coordinates by means of covariant differentiation. Considering the faces to be membranes and assuming an axisymmetric buckling mode, the equilibrium equations are uncoupled through the application of an improved technique.

For a clamped outer edge and "slider" inner edge a series solution is applied to the general problem of radially varying in-plane stresses. Critical stresses are plotted versus ratio of inner and outer radii. The fifth approximation is shown to yield acceptable results.

CHAPTER I

INTRODUCTION

A sandwich panel is defined as a three-layer panel, consisting of two thin outer layers of high-strength material between which a thick layer of low average strength and density is sandwiched. The two thin outer layers are called faces, and the intermediate layer is the core of the panel [1].*

Among the main advantages of sandwich construction are: a high rigidity to weight ratio, good thermal and accoustical insulation, and ease of mass production. Some examples of core materials are balsa wood, cellulose acetate and synthetic rubber. However, in more recent times thin foils in the form of hexagonal cells perpendicular to the faces have been employed. Depending upon the intended application, faces may be constructed of aluminum alloys, high-strength steel, etc.

The practical importance of sandwich construction came into prominence with the advent of the aircraft and space industries. With the need for lighter, stronger and more stable structural components, great emphasis was placed upon the design and analysis of workable sandwich panels.

---

*Numbers in brackets refer to the Bibliography.

The essential difference between the analysis of single-layer panels and that of sandwich panels is that the shear deformation associated with the core of a sandwich panel may not be neglected. Moreover, initially plane sections no longer remain plane during bending, and the existing plate theories [2,3] require extensive modifications.

Numerous authors have contributed to the development of mathematical theories describing the behavior of rectangular sandwich panels. Two of the more noted of these are Hoff [4] and Eringen [5] who, early in the 1950's illustrated a concise and straightforward approach to the problem using the theorem of minimum potential energy. In 1960 Chang and Ebcioglu [6] introduced continuity conditions for displacements across the interface of two adjacent layers. This modification has been shown [7] to contribute appreciably to the accuracy of the derived equations, while introducing no additional mathematical complications.

In comparison, circular sandwich panels have been the subject of relatively little investigation. In 1949 Eric Reissner [8], neglecting the bending rigidity of the faces, solved the problem of a circular sandwich panel subjected to axisymmetric transverse loading. Later Zaid [9] included the effects of the bending rigidity of the face layers. Huang and Ebcioglu [10], using a technique similar to that employed by Zaid, recently investigated the axisymmetric buckling of a circular sandwich panel subjected to uniform axial compression. In their final results, the faces were treated as membranes.

Prior to the advent of sandwich construction, the stability of circular and annular single-layer panels were extensively investigated [3]. Meissner [11] analyzed the axisymmetric buckling of a single-layer annular panel subjected to uniform compression along the outer boundary. In this work, the inner boundary was considered free and the outer boundary simply supported or clamped. Olsson [12] extended Meissner's analysis by considering the outer boundary clamped and the inner boundary "slider." Such a condition could be approximated by allowing a shaft or rigid cylinder to occupy the central hole (see Figure 2).

Prompted by the foregoing sequence of investigations, the main objectives of the present analysis are: (i) to parallel the sequence of analysis present in the literature of single-layer panels by investigating the axisymmetric buckling of annular sandwich panels; (ii) to achieve a more satisfactory formulation of the theory through the use of continuity conditions [6]; (iii) to modify the uncoupling procedure introduced by Zaid [9] and later employed by Huang and Ebcioglu [10], thereby significantly reducing the complexity of the uncoupled equilibrium equations; and (iv) to apply the boundary conditions employed by Olsson [12] to the present work.

For the initial derivation, the set of basic assumptions employed in the present analysis are:

(A1) The effect of transverse normal stress in each layer is negligible.

(A2) The core undergoes shear deformation only.

(A3) Displacements in each layer are linear functions of distance from the median plane of the layer.

(A4) The median plane of the core remains neutral during small deflections of the panel.

(A5) Each layer is homogeneous and isotropic.

(A6) The core is attached to the faces securely.

(A7) Hooke's law is valid throughout.

(A8) Local buckling of the panel does not occur.

These assumptions are similar to those used by Hoff [4] and Chang and Ebcioglu [13].

Equilibrium equations and boundary conditions are derived, using the above assumptions and the theorem of minimum potential energy. These equations are then transformed into polar coordinates through the application of tensor analysis. In order to solve our problem, the resulting equations are then simplified further using the following additional assumptions:

(B1) Bernoulli-Navier hypothesis is valid for the faces.

(B2) Faces are considered to be membranes.

(B3) Annular sandwich panel subjected to uniform axial compression buckles axisymmetrically.

The first assumption is valid when the shear deformation of the face layers is negligible. Kim [7] has shown this to be true for most practical applications. The second assumption, which has been employed by many authors [8,10], is discussed at length by Plantema [1]. Finally, the assumption of axisymmetric buckling cannot be rigorously verified without solving the more difficult problem of unsymmetric buckling. However, such an assumption would seem reasonable since Olsson [12] has proved its validity for the analogous problem of a single-layer panel with similar boundary conditions.

When comparing the present work with existing and subsequent theories, the words panel and plate may be considered interchangeable.

Numerical computations are carried out by a desk calculater.

CHAPTER II

BASIC CONCEPTS

1. Description of Sandwich Panel and Notations

An element of the sandwich panel to be considered in this work is shown in Figure 1. For convenience, three coordinate systems are defined having common x- and y-coordinates, and transverse coordinates related as follows:

$$z' = z - \frac{t_c + t_f}{2}$$
$$z'' = z + \frac{t_c + t_f}{2} \tag{1}$$

where t_c is the thickness of the core and t_f is the thickness of the face layers which are identical. In the notational system employed here, a single prime denotes quantities related to the lower face, a double prime those related to the upper face, and unprimed quantities are used for the core as well as for general relations. Subscripts c and f denote quantities related to the core and face, respectively.

The total thickness of the panel is assumed to be very small in comparison with the lateral dimensions. Also, each layer is considered to be isotropic and homogeneous, with the properties of the faces characterized by E_f and ν_f, and those of the core characterized by G_c.

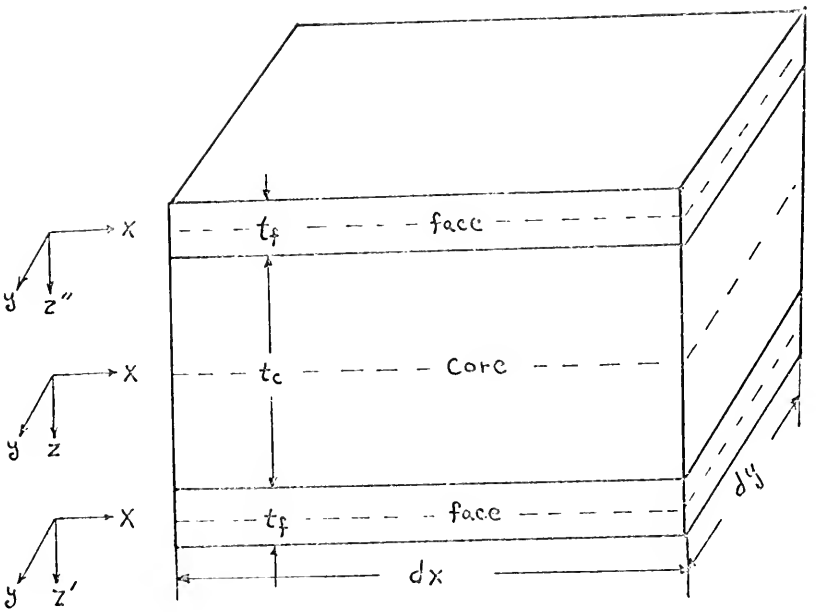

Figure 1. Element of Sandwich Panel

Arbitrary transverse load q, axial forces $\underline{N}_{\alpha\beta}$, and external moments $\underline{M}_{\alpha\beta}$ are the only externally applied forces or moments which may contribute work to the system.

For the initial derivation and formulations, indicial notation will be employed. Greek indices α, β, γ and μ will take on values 1 or 2, while Latin indices, when employed, will take on values 1, 2 or 3. Any repeated index denotes summation, while any number of indices preceded by a comma indicates partial differentiation with respect to the coordinate variable represented by those indices.

2. Displacements

In the following relations, which are valid for small displacements, it will be assumed that within each layer of the sandwich panel plane sections are preserved, although not necessarily perpendicular to the deflected middle surface. This will constitute an approximation since the presence of transverse shear suggests a non-linear variation of the longitudinal displacements through the thickness. Also, while the panel is geometrically symmetric with respect to the middle surface, the displacement relations will not, in general, reflect this symmetry, since unequal bending moments may be externally applied to each face layer. Therefore, with the aid of equation (1), our displacements can be written in the following form:

$$
\begin{aligned}
V'_\alpha(x,y,z') &= u'_\alpha(x,y) + z'\psi'_\alpha(x,y) & V'_3(x,y,z') &= w(x,y) \\
V_\alpha(x,y,z) &= z\psi_\alpha(x,y) & V_3(x,y,z) &= w(x,y) \qquad (2) \\
V''_\alpha(x,y,z'') &= u''_\alpha(x,y) + z''\psi''_\alpha(x,y) & V''_3(x,y,z'') &= w(x,y)
\end{aligned}
$$

where (V_α, V_3) is the displacement of a generic point in the sandwich panel; u_α represents the displacement in the xy-plane of a point lying in the median plane of either face; ψ_α represents the angle that the normal to the median plane of each layer rotates when the planes are deflected; and w is the transverse deflection which is assumed to be constant through the entire thickness.

In order to ensure continuity at the interface of any two adjacent layers, the following conditions must be imposed on equation (2):

$$\begin{aligned} u'_\alpha - \frac{t_f}{2}\psi'_\alpha &= \frac{t_c}{2}\psi_\alpha \\ u''_\alpha + \frac{t_f}{2}\psi''_\alpha &= -\frac{t_c}{2}\psi_\alpha \end{aligned} \tag{3}$$

Using (3) to eliminate ψ_α and u''_α from (2), our displacement relations become:

$$\begin{aligned} V'_\alpha &= u'_\alpha + z'\psi'_\alpha & V'_3 &= w \\ V_\alpha &= \frac{z}{t_c}(2u'_\alpha - t_f\psi'_\alpha) & V_3 &= w \\ V''_\alpha &= -u'_\alpha + z''\psi''_\alpha + \frac{t_f}{2}(\psi'_\alpha - \psi''_\alpha) & V''_3 &= w \end{aligned} \tag{4}$$

3. Strain-Displacement Relations

Linear strain-displacement relations are defined by [11]:

$$\begin{aligned} e_{\alpha\beta} &= \frac{1}{2}(V_{\alpha,\beta} + V_{\beta,\alpha}) \\ e_{\alpha 3} &= \frac{1}{2}(V_{\alpha,3} + V_{3,\alpha}) \\ e_{33} &= V_{3,3} \end{aligned} \tag{5}$$

Using (4) in conjunction with (5), the strain-displacement relations for each layer become:

$$e'_{\alpha\beta} = \frac{1}{2}[u'_{\alpha,\beta} + z'\psi'_{\alpha,\beta} + u'_{\beta,\alpha} + z'\psi'_{\beta,\alpha}]$$

$$e'_{\alpha 3} = \frac{1}{2}[\psi'_{\alpha} + w_{,\alpha}]$$

$$e'_{33} = 0$$

$$e_{\alpha\beta} = \frac{z}{2t_c}[2u'_{\alpha,\beta} - t_f\psi'_{\alpha,\beta} + 2u'_{\beta,\alpha} - t_f\psi'_{\beta,\alpha}]$$

$$e_{\alpha 3} = \frac{1}{t_c}[u'_{\alpha} + \frac{1}{2}(t_c w_{,\alpha} - t_f\psi'_{\alpha})] \tag{6}$$

$$e_{33} = 0$$

$$e''_{\alpha\beta} = \frac{1}{2}[-u'_{\alpha,\beta} + \frac{t_f}{2}(\psi'_{\alpha,\beta} - \psi''_{\alpha,\beta}) + z''\psi''_{\alpha,\beta}$$

$$- u'_{\beta,\alpha} + \frac{t_f}{2}(\psi'_{\beta,\alpha} - \psi''_{\beta,\alpha}) + z''\psi''_{\beta,\alpha}]$$

$$e''_{\alpha 3} = \frac{1}{2}[\psi''_{\alpha} + w_{,\alpha}]$$

$$e''_{33} = 0$$

4. Stress-Strain Relations

The generalized Hooke's law for a homogeneous isotropic body can be written in the following form [15]:

$$\tau_{ij} = \frac{E}{1-\nu}[e_{ij} + \frac{\nu}{1-2\nu}\delta_{ij}\, e_{kk}] \tag{7}$$

where the Latin indices i, j and k take on the values 1, 2 and 3.

When the transverse normal stress, τ_{33}, is neglected, (7) may be rewritten as [15]:

$$\tau_{\alpha\beta} = \frac{E}{1-\nu}[e_{\alpha\beta} + \frac{\nu}{1-\nu}\,\delta_{\alpha\beta}\,e_{\gamma\gamma}]$$

$$\tau_{\alpha 3} = \tau_{3\alpha} = 2G\,e_{\alpha 3} = \frac{E}{1+\nu}\,e_{\alpha 3} \tag{8}$$

$$\tau_{33} = 0$$

or,

$$\tau_{\alpha\beta} = \frac{E}{1-\nu^2}\,A_{\alpha\beta\gamma\mu}\,e_{\gamma\mu}$$

$$\tau_{\alpha 3} = \frac{E}{1+\nu}\,e_{\alpha 3} \tag{9}$$

where,

$$A_{\alpha\beta\gamma\mu} = \frac{1-\nu}{2}(\delta_{\alpha\mu}\,\delta_{\beta\gamma} + \delta_{\alpha\gamma}\,\delta_{\beta\mu} + \frac{2\nu}{1-\nu}\,\delta_{\alpha\beta}\,\delta_{\gamma\mu})$$

with,

$$A_{\alpha\beta\gamma\mu} = A_{\beta\alpha\gamma\mu} = A_{\alpha\beta\mu\gamma} = A_{\gamma\mu\alpha\beta}$$

If the lateral, in-plane stresses, $\tau_{\alpha\beta}$, are also neglected, (9) reduces to:

$$\tau_{\alpha 3} = \frac{E}{1+\nu}\,e_{\alpha 3} = 2G\,e_{\alpha 3} \tag{10}$$

Assumption (A1) implies that equations (9) may be used for the face layers, while assumption (A2) suggests the use of equation (10) for the core.

5. Stress Resultants

In order to reduce the three-dimensional elasticity problem to a two-dimensional one, the following stress resultants are defined:

$$N'_{\alpha\beta} \equiv \int_{-\frac{t_f}{2}}^{\frac{t_f}{2}} \tau'_{\alpha\beta}\, dz' \;;\; N''_{\alpha\beta} \equiv \int_{-\frac{t_f}{2}}^{\frac{t_f}{2}} \tau''_{\alpha\beta}\, dz'' \;;$$

$$M'_{\alpha\beta} \equiv \int_{-\frac{t_f}{2}}^{\frac{t_f}{2}} \tau'_{\alpha\beta}\, z' dz' \;;\; M''_{\alpha\beta} \equiv \int_{-\frac{t_f}{2}}^{\frac{t_f}{2}} \tau''_{\alpha\beta}\, z'' dz'' \;; \tag{11}$$

$$Q'_{\alpha} \equiv \int_{-\frac{t_f}{2}}^{\frac{t_f}{2}} \tau'_{\alpha 3}\, dz' \;;\; Q''_{\alpha} \equiv \int_{-\frac{t_f}{2}}^{\frac{t_f}{2}} \tau''_{\alpha 3}\, dz'' \;;\; Q_{\alpha} \equiv \int_{-\frac{t_c}{2}}^{\frac{t_c}{2}} \tau_{\alpha 3}\, dz$$

where M, N, and Q denote internal moments, in-plane stress resultants, and shear resultants, respectively.

Expressions for stress resultants in terms of displacements are obtained by substituting strain-displacement relations (6) into equations (9) and (10), yielding relations for the faces and core, respectively. When these relations are then substituted into equations (11), and the indicated integration performed, the following expressions for stress resultants and moments are obtained:

$$M'_{\alpha\beta} = D_f \; A_{\alpha\beta\gamma\mu} \; \psi'_{\gamma,\mu}$$

$$M''_{\alpha\beta} = D_f \; A_{\alpha\beta\gamma\mu} \; \psi''_{\gamma,\mu}$$

$$N'_{\alpha\beta} = \frac{t_f E_f}{1-\nu_f^2} A_{\alpha\beta\gamma\mu} \; u'_{\gamma,\mu}$$

$$N''_{\alpha\beta} = \frac{t_f E_f}{1-\nu_f^2} A_{\alpha\beta\gamma\mu} \left[-u'_{\gamma,\mu} + \frac{t_f}{2} \left(\psi'_{\gamma,\mu} - \psi''_{\gamma,\mu} \right) \right] \tag{12}$$

$$Q'_\alpha = \frac{t_f E_f}{2(1+\nu_f)} \left[\psi'_\alpha + w_{,\alpha} \right]$$

$$Q''_\alpha = \frac{t_f E_f}{2(1+\nu_f)} \left[\psi''_\alpha + w_{,\alpha} \right]$$

$$Q_\alpha = 2G_c \left[u'_\alpha + \frac{1}{2}(t_c w_{,\alpha} - t_f \; \psi'_\alpha) \right]$$

where the bending rigidity of the faces, D_f, is defined:

$$D_f \equiv \frac{E_f t_f^3}{12(1-\nu_f^2)}$$

CHAPTER III

DERIVATION OF EQUATIONS IN CARTESIAN COORDINATES

1. Total Potential

The total potential consists of the strain energy stored in the panel during a small deformation and the total work performed on the panel by the external forces and moments during that deformation.

In general, the strain energy stored in the body is defined [14]:

$$U = \frac{1}{2} \iiint_V \tau_{ij} \, e_{ij} \, dv \tag{13}$$

In particular, as a result of assumptions (A1) and (A2), the strain energies associated with the faces and core are:

$$\begin{aligned} U_f' &= \frac{1}{2} \iiint_{V'} (\tau'_{\alpha\beta} \, e'_{\alpha\beta} + 2\tau'_{\alpha 3} \, e'_{\alpha 3}) \, dv' \\ U_c &= \frac{1}{2} \iiint_V (2\tau_{\alpha 3} \, e_{\alpha 3}) \, dv \\ U_f'' &= \frac{1}{2} \iiint_{V''} (\tau''_{\alpha\beta} \, e''_{\alpha\beta} + 2\tau''_{\alpha 3} \, e''_{\alpha 3}) \, dv'' \end{aligned} \tag{14}$$

where the integration is performed over the volumes of the individual layers.

Also, since the only externally applied forces or moments which are allowed to do work are the transverse loading function, q, the axial forces $\underline{N}_{\alpha\beta}$, and the external moments $\underline{M}_{\alpha\beta}$, the work performed on the panel is defined by:

$$
\begin{aligned}
W_q &= \iint_a qw \, da \\
W'_N &= -\frac{1}{4} \iint_a \underline{N}_{\alpha\beta} (V'_{\alpha,\beta} + V'_{\beta,\alpha} + w_{,\alpha} w_{,\beta}) \, da' \\
W''_N &= -\frac{1}{4} \iint_a \underline{N}_{\alpha\beta} (V''_{\alpha,\beta} + V''_{\beta,\alpha} + w_{,\alpha} w_{,\beta}) \, da'' \\
W_M &= \int_s (\underline{M}'_{\alpha\beta} \psi'_\alpha + \underline{M}''_{\alpha\beta} \psi''_\alpha) \, n_\beta ds
\end{aligned}
\tag{15}
$$

where the integration is performed over the areas and boundaries of the individual layers.

In the second and third integral expressions of (15), which are analogous to those employed by Timoshenko [3] and Eringen [5], it is assumed that the total axial load is evenly distributed between the upper and lower faces.

Therefore, the total potential, which is defined as

$$
\mathcal{V} = U'_f + U_c + U''_f - W_q - W'_N - W''_N - W_M \tag{16}
$$

may be rewritten, using (14) and (15), in the following form:

$$\mathcal{V} = \frac{1}{2}\iiint_{v'} (\tau'_{\alpha\beta}\, e'_{\alpha\beta} + 2\tau'_{\alpha 3}\, e'_{\alpha 3})\, dv'$$

$$+ \frac{1}{2}\iiint_{v} (2\tau_{\alpha 3}\, e_{\alpha 3})\, dv + \frac{1}{2}\iiint_{v''} (\tau''_{\alpha\beta}\, e''_{\alpha\beta} + 2\tau''_{\alpha 3}\, e''_{\alpha 3})\, dv''$$

$$- \iint_{a} qw\, da + \frac{1}{4}\iint_{a} \underline{N}_{\alpha\beta}\, (V'_{\alpha,\beta} + V'_{\beta,\alpha} + w_{,\alpha}\, w_{,\beta})\, da'$$

$$+ \frac{1}{4}\iint_{a} \underline{N}_{\alpha\beta}\, (V''_{\alpha,\beta} + V''_{\beta,\alpha} + w_{,\alpha}\, w_{,\beta})\, da''$$

$$- \int_{s} (\underline{M}'_{\alpha\beta}\, \psi'_{\alpha} + \underline{M}''_{\alpha\beta}\, \psi''_{\alpha})\, n_{\beta}\, ds \tag{17}$$

2. Theorem of Minimum Potential Energy

The theorem of minimum potential energy states that of all displacements satisfying the given boundary conditions, those which satisfy the equilibrium equations make the total potential energy an absolute minimum [14]. Therefore, equilibrium equations and boundary conditions for the sandwich panel are given by the variational equation:

$$\delta\, \mathcal{V} = 0 \tag{18}$$

However, before applying this extremum principle to equation (17), we note that:

$$\delta\, (\tau'_{\alpha\beta}\, e'_{\alpha\beta}) = \delta \left[\frac{E_f}{1-\nu_f^2}\, A_{\alpha\beta\gamma\mu}\, e'_{\alpha\beta}\, e'_{\gamma\mu}\right]$$

$$= \frac{2E_f}{1-\nu_f^2}\, A_{\alpha\beta\gamma\mu}\, e'_{\alpha\beta}\, \delta\, e'_{\gamma\mu}$$

$$= 2\tau'_{\alpha\beta}\, \delta\, e'_{\alpha\beta} \tag{19}$$

and similarly,

$$\delta\ (\tau'_{\alpha 3}\ e'_{\alpha 3}) = 2\tau'_{\alpha 3}\ \delta e'_{\alpha 3} \tag{20}$$

$$\delta\ (\tau_{\alpha 3}\ e_{\alpha 3}) = 2\tau_{\alpha 3}\ \delta e_{\alpha 3} \tag{21}$$

$$\delta\ (\tau''_{\alpha 3}\ e''_{\alpha 3}) = 2\tau''_{\alpha 3}\ \delta e''_{\alpha 3} \tag{22}$$

$$\delta\ (\tau''_{\alpha\beta}\ e''_{\alpha\beta}) = 2\tau''_{\alpha\beta}\ \delta e''_{\alpha\beta} \tag{23}$$

Therefore, using equations (19-23) in conjunction with displacement relations (4) and strain-displacement relations (6), the variation of equation (17) yields:

$$\begin{aligned}
\delta\mathcal{V} = & \iiint_{V'} \left[\tau'_{\alpha\beta}(\delta u'_{\alpha,\beta} + z'\delta\psi'_{\alpha,\beta}) + \tau'_{\alpha 3}(\delta\psi'_{\alpha} + \delta w_{,\alpha})\right] dv' \\
& + \iiint_{V} 2\tau_{\alpha 3}\left[\frac{\delta u'_{\alpha}}{t_c} + \frac{1}{2}\ (\delta w_{,\alpha} - \frac{t_f}{t_c}\ \delta\psi'_{\alpha})\right] dv \\
& + \iiint_{V''} \Big\{\tau''_{\alpha\beta}\left[-\ \delta u'_{\alpha,\beta} + z''\delta\psi''_{\alpha,\beta} + \frac{t_f}{2}\ (\delta\psi'_{\alpha,\beta} - \delta\psi''_{\alpha,\beta})\right] \\
& \qquad + \tau''_{\alpha 3}\left[\delta\psi''_{\alpha} + \delta w_{,\alpha}\right]\Big\}\ dv'' \\
& - \iint_{a} q\ \delta w\ da + \frac{1}{2}\iint_{a} \underline{N}_{\alpha\beta}\left[2w_{,\alpha}\ \delta w_{,\beta} + \frac{t_f}{2}\ (\delta\psi'_{\alpha,\beta} - \delta\psi''_{\alpha,\beta})\right] da \\
& - \int_{s} \left[\underline{M}'_{\alpha\beta}\ \delta\psi'_{\alpha} + \underline{M}''_{\alpha\beta}\ \delta\psi''_{\alpha}\right] n_{\beta}\ ds = 0
\end{aligned} \tag{24}$$

In equation (24) the symmetry of the stress tensors and strain tensors has been employed. Also, the displacements

associated with $\underset{\sim}{N}_{\alpha\beta}$ are those occurring in the median planes of the face layers.

Using relations (11) to reduce the volume integrals in equation (24), and applying the two-dimensional divergence theorem of Gauss to the resulting area integrals, the final integral equation is obtained.

As an example of the above procedure, consider the first term in the integrand of equation (24):

$$\iiint_{v'} \tau'_{\alpha\beta}\ \delta u'_{\alpha,\beta}\ dv' = \iint_a \int_{-t_f/2}^{t_f/2} \tau'_{\alpha\beta}\ \delta u'_{\alpha,\beta}\ dz'\ da$$

$$= \iint_a N'_{\alpha\beta}\ \delta u'_{\alpha,\beta}\ da$$

$$= \iint_a \left[(N'_{\alpha\beta}\ \delta u'_{\alpha})_{,\beta} - N'_{\alpha\beta,\beta}\ \delta u'_{\alpha} \right] da$$

$$= \int_s N'_{\alpha\beta}\ \delta u'_{\alpha}\ n_{\beta}\ ds - \iint_a N'_{\alpha\beta,\beta}\ \delta u'_{\alpha}\ da \qquad (25)$$

After applying a similar procedure to the remaining terms, and collecting coefficients of similar virtual displacements, a complete description of the sandwich panel in the equilibrium state is obtained in integral form:

$$\delta \mathcal{V} = \iint_a \left\{ \left[- q - Q_{\alpha,\alpha} - \underset{\sim}{N}_{\alpha\beta}\ w_{,\alpha\beta} - Q'_{\alpha,\alpha} - Q''_{\alpha,\alpha} \right] \delta w \right.$$

$$+ \left[\frac{2Q_{\alpha}}{t_c} - N'_{\alpha\beta,\beta} + N''_{\alpha\beta,\beta} \right] \delta u'_{\alpha} + \left[- \frac{t_f}{t_c} Q_{\alpha} - M'_{\alpha\beta,\beta} \right.$$

$$+ Q'_\alpha - \frac{t_f}{2} N''_{\alpha\beta,\beta}\Big] \delta\psi'_\alpha + \Big[\frac{t_f}{2} N''_{\alpha\beta,\beta} - M''_{\alpha\beta,\beta} + Q''_\alpha\Big] \delta\psi''_\alpha\Big\} \, da$$

$$+ \int_s \Big\{\Big[Q_\alpha + \underline{N}_{\alpha\beta} \, w_{,\beta} + Q'_\alpha + Q''_\alpha\Big] \delta w$$

$$+ \Big[N'_{\alpha\beta} - N''_{\alpha\beta}\Big] \delta u'_\beta + \Big[\frac{t_f}{4} \underline{N}_{\alpha\beta} + M'_{\alpha\beta} + \frac{t_f}{2} N''_{\alpha\beta} - \underline{M}''_{\alpha\beta}\Big] \delta\psi'_\beta$$

$$+ \Big[- \frac{t_f}{4} \underline{N}_{\alpha\beta} - \frac{t_f}{2} N''_{\alpha\beta} + M''_{\alpha\beta} - \underline{M}''_{\alpha\beta}\Big] \delta\psi''_\beta\Big\} \, n_\alpha \, ds = 0 \qquad (26)$$

3. Equilibrium Equations and Boundary Conditions

If we apply the fundamental lemma of the calculus of variations [15] to equation (26), we obtain the following equilibrium equations in terms of stress resultants and moments:

$$- \underline{N}_{\alpha\beta} \, w_{,\alpha\beta} - (Q_\alpha + Q'_\alpha + Q''_\alpha)_{,\alpha} = q$$

$$\frac{2Q_\alpha}{t_c} - N'_{\alpha\beta,\beta} + N''_{\alpha\beta,\beta} = 0$$

$$- \frac{t_f}{t_c} Q_\alpha - M'_{\alpha\beta,\beta} + Q'_\alpha - \frac{t_f}{2} N''_{\alpha\beta,\beta} = 0$$

$$\frac{t_f}{2} N''_{\alpha\beta,\beta} - M''_{\alpha\beta,\beta} + Q''_\alpha = 0 \qquad (27)$$

and boundary conditions,

$$\int_s \Big[Q_\alpha + Q'_\alpha + Q''_\alpha + \underline{N}_{\alpha\beta} \, w_{,\beta}\Big] \delta w \, n_\alpha \, ds = 0$$

$$\int_s \Big[N'_{\alpha\beta} - N''_{\alpha\beta}\Big] \delta u'_\alpha \, n_\beta \, ds = 0$$

$$\int_s \left[\frac{-t_f}{4} \underline{N}_{\alpha\beta} + M'_{\alpha\beta} + \frac{t_f}{2} N''_{\alpha\beta}\right] \delta\psi'_\alpha \, n_\beta \, ds = 0$$

$$\int_s \left[- \frac{t_f}{4} \underline{N}_{\alpha\beta} + M''_{\alpha\beta} - \frac{t_f}{2} N''_{\alpha\beta}\right] \delta\psi''_\alpha \, n_\beta \, ds = 0 \qquad (28)$$

If we substitute the stress resultant-displacement relations (12) into equations (27) and (28), and collect similar terms, we obtain the following equilibrium equations in terms of displacements:

$$- 2G_c \, [u'_{\alpha,\alpha} + \frac{1}{2} (t_c w_{,\alpha\alpha} - t_f \psi'_{\alpha,\alpha})] - \underline{N}_{\alpha\beta} \, w_{,\alpha\beta} - \frac{t_f E_f}{2(1+\nu_f)} [2w_{,\alpha\alpha} + (\psi'_{\alpha,\alpha} + \psi''_{\alpha,\alpha})] = q$$

$$\frac{4G_c}{t_c} [u'_\alpha + \frac{1}{2} (t_c w_{,\alpha} - t_f \psi'_\alpha)] + \frac{t_f E_f}{2(1-\nu_f^2)} A_{\alpha\beta\gamma\mu} [- 4u'_{\gamma,\beta\mu} + t_f (\psi'_{\gamma,\beta\mu} - \psi''_{\gamma,\beta\mu})] = 0$$

$$\frac{-2t_f G_c}{t_c} [u'_\alpha + \frac{1}{2} (t_c w_{,\alpha} - t_f \psi'_\alpha)] + \frac{t_f E_f}{2(1+\nu_f)} [\psi'_\alpha + w_{,\alpha}] + \frac{t_f^2 E_f}{2(1-\nu_f^2)} A_{\alpha\beta\gamma\mu} u'_{\gamma,\beta\mu} - D_f A_{\alpha\beta\gamma\mu} [4\psi'_{\gamma,\beta\mu} - 3\psi''_{\gamma,\beta\mu}] = 0$$

$$\frac{-t_f^2 E_f}{2(1-\nu_f^2)} A_{\alpha\beta\gamma\mu} u'_{\gamma,\beta\mu} + \frac{t_f E_f}{2(1+\nu_f)} [\psi''_\alpha + w_{,\alpha}] - D_f A_{\alpha\beta\gamma\mu} [- 3\psi'_{\gamma,\beta\mu} + 4\psi''_{\gamma,\beta\mu}] = 0 \qquad (29)$$

and boundary conditions,

$$\int_s \left\{2G_c[u'_\alpha + \frac{1}{2}(t_c w_{,\alpha} - t_f\psi'_\alpha)] + \underline{N}_{\alpha\beta}\, w_{,\beta} + \frac{t_f E_f}{2(1+\nu_f)}[2w_{,\alpha} + \psi'_\alpha + \psi''_\alpha]\right\} \delta w\, n_\alpha\, ds = 0$$

$$\int_s \left\{\frac{t_f E_f}{2(1-\nu_f^2)} A_{\alpha\beta\gamma\mu}[4u'_{\gamma,\mu} - t_f(\psi'_{\gamma,\mu} - \psi''_{\gamma,\mu})]\right\}\delta u'_\alpha\, n_\beta\, ds = 0$$

$$\int_s \left\{\frac{t_f}{4}\underline{N}_{\alpha\beta} + \frac{t_f E_f}{2(1-\nu_f^2)} A_{\alpha\beta\gamma\mu}\left[\frac{t_f^2}{2}(\psi'_{\gamma,\mu} - \psi''_{\gamma,\mu}) - t_f\, u'_{\gamma,\mu}\right] + D_f\, A_{\alpha\beta\gamma\mu}\, \psi'_{\gamma,\mu} - \underline{M}_{\alpha\beta}\right\} \delta\psi'_\alpha\, n_\beta\, ds = 0$$

$$\int_s \left\{-\frac{t_f}{4}\underline{N}_{\alpha\beta} - \frac{t_f E_f}{2(1-\nu_f^2)} A_{\alpha\beta\gamma\mu}\left[\frac{t_f^2}{2}(\psi'_{\gamma,\mu} - \psi''_{\gamma,\mu}) - t_f\, u'_{\gamma,\mu}\right] + D_f\, A_{\alpha\beta\gamma\mu}\, \psi''_{\gamma,\mu} - \underline{M}_{\alpha\beta}\right\} \delta\psi''_\alpha\, n_\beta\, ds = 0 \qquad (30)$$

Boundary conditions (30) state that either the quantities contained within the large brackets must vanish along the boundary, or the variation of the displacement must vanish along the boundary.

Compared with equations (27) and (28), equations (29) and (30) constitute a formulation through which the buckling problem can be more readily solved. This becomes immediately evident by considering the classical concept of instability which is associated with displacement fields rather than stress fields.

4. Simplification of Equations

In order to simplify equations (29) and (30), we exclude the possibility of externally applied edge moments by specifying:

$$\underline{M}'_{\alpha\beta} = \underline{M}''_{\alpha\beta} = 0 \tag{31}$$

which reduces the number of dependent variables from seven to five since (31) suggests:

$$\psi'_{\alpha} = \psi''_{\alpha} \tag{32}$$

Also, if we assume that plane sections remain perpendicular to the deflected middle surface of each respective face (asssumption B1), we have,

$$\psi'_{\alpha} = \psi''_{\alpha} = - w_{,\alpha} \tag{33}$$

which further reduces the number of dependent variables to three.

A final assumption (B2) which simplifies the problem by reducing the order of the differential equations is [1]:

$$t_c \gg t_f \tag{34}$$

which justifies neglecting the bending rigidity of the faces, D_f, compared with the bending rigidity of the panel as a whole.

Consequently, when equations (29) and (30) are simplified through the application of (31-34), we obtain the following equilibrium equations:

$$-\hat{t}\ t_c\ G_c\ \left(\frac{2}{t_c}\ u_{\alpha,\alpha} + \hat{t}\ w_{,\alpha\alpha}\right) - \underline{N}_{\alpha\beta}\ w_{,\alpha\beta} = q$$

$$2G_c\ \left[\frac{2}{t_c}\ u_\alpha + \hat{t}\ w_{,\alpha}\right] - \frac{2t_f E_f}{1-\nu_f^2}\ A_{\alpha\beta\gamma\mu}\ u_{\gamma,\beta\mu} = 0 \tag{35}$$

and boundary conditions,

$$\int_s \left\{2\hat{t}\ t_c\ G_c \left[\frac{u_\alpha}{t_c} + \frac{\hat{t}}{2}\ w_{,\alpha}\right] + \underline{N}_{\alpha\beta}\ w_{,\beta}\right\} \delta w\ n_\alpha\ ds = 0$$

$$\int_s \left\{\frac{2t_f E_f}{1-\nu_f^2}\ A_{\alpha\beta\gamma\mu}\ u_{\gamma,\mu}\right\} \delta u_\alpha\ n_\beta\ ds = 0 \tag{36}$$

Equations (35) and (36) can be rewritten in extended form as:

$$-\hat{t}\ t_c\ G_c \left[\frac{2}{t_c}\ u_{x,x} + \hat{t}\ w_{,xx}\right] - \hat{t}\ t_c\ G_c \left[\frac{2}{t_c}\ u_{y,y} + \hat{t}\ w_{,yy}\right]$$

$$- \underline{N}_{xx}\ w_{,xx} - 2\underline{N}_{xy}\ w_{,xy} - \underline{N}_{yy}\ w_{,yy} = q$$

$$2G_c \left[\frac{2}{t_c}\ u_x + \hat{t}\ w_{,x}\right] - \frac{t_f E_f}{1-\nu_f^2}\ [(1+\nu_f)(u_{x,xx} + u_{y,xy})$$

$$+ (1-\nu_f)(u_{x,xx} + u_{x,yy})] = 0$$

$$2G_c \left[\frac{2}{t_c}\ u_y + \hat{t}\ w_{,y}\right] - \frac{t_f E_f}{1-\nu_f^2}\ [(1+\nu_f)(u_{y,yy} + u_{x,xy})$$

$$+ (1-\nu_f)(u_{y,xx} + u_{y,yy})] = 0 \tag{37}$$

and,

$$\int^{y}\left\{2\hat{t}\ t_c G_c\left[\frac{u_x}{t_c}+\frac{\hat{t}}{2}\ w_{,x}\right]+\underline{N}_{xx}\ w_{,x}+\underline{N}_{xy}\ w_{,y}\right\}\delta w\ n_x\ dy=0$$

$$\int^{x}\left\{2\hat{t}\ t_c G_c\left[\frac{u_y}{t_c}+\frac{\hat{t}}{2}\ w_{,y}\right]+\underline{N}_{yy}\ w_{,y}+\underline{N}_{xy}\ w_{,x}\right\}\delta w\ n_y\ dx=0$$

$$\int^{y}\left\{\frac{2t_f E_f}{1-\nu_f^2}\left[u_{x,x}+\nu_f\ u_{y,y}\right]\right\}\delta u_x\ n_x\ dy=0$$

$$\int^{y}\left\{\frac{t_f E_f}{1+\nu_f}\left[u_{x,y}+u_{y,x}\right]\right\}\delta u_y\ n_x\ dy=0$$

$$\int^{x}\left\{\frac{2t_f E_f}{1-\nu_f^2}\left[u_{y,y}+\nu_f\ u_{x,x}\right]\right\}\delta u_y\ n_y\ dx=0$$

$$\int^{x}\left\{\frac{t_f E_f}{1+\nu_f}\left[u_{x,y}+u_{y,x}\right]\right\}\delta u_x\ n_y\ dx=0 \tag{38}$$

$$\text{where}\qquad \hat{t}\equiv\frac{t_c+t_f}{t_c}\ ,$$

and primes and double primes have been omitted without confusion as a result of equation (31).

Equations (37), which are a special case of equations (29), are identical with those derived by Chang and Ebcioglu [13] if thermoelastic effects are neglected.

It should be noted that when simplification (33) is introduced into equations (29) and (30), equations (35) and (36) are not immediately produced. The last two of equations (29) must be returned to the area integral of equation (26) where, as a result of (33), they become coefficients of $-\delta w_{,\alpha}$. Consequently, a transformation procedure similar to that illustrated in equation (25) yields additional terms which contribute to equations (35) and (36).

CHAPTER IV

EQUILIBRIUM EQUATIONS AND BOUNDARY CONDITIONS IN CYLINDRICAL COORDINATES

1. Application of Covariant Derivatives

Let us consider a covariant derivative of an arbitrary covariant vector, X_n, [16]:

$$X_{n|q} = \frac{\partial X_n}{\partial \chi^q} - \left\{ {\ell \atop nq} \right\} X_\ell \tag{39}$$

In (39) χ^q is a general coordinate variable, $\left\{ {\ell \atop nq} \right\}$ is the Christoffel symbol of the second kind, and all indices take on values 1, 2, or 3. Furthermore, when a vertical line precedes any number of indices, it indicates covariant differentiation with respect to the coordinate variables represented by those indices.

In considering the second covariant derivative of an arbitrary vector we must recall that in order to sum two indices we must have one covariant and one contravariant index. Therefore, introducing the metric tensor, g^{nq}, (39) implies:

$$X_{n|}{}^{s} = g^{sq} X_{n|q} = g^{sq} \left[\frac{\partial X_n}{\partial \chi^q} - \left\{ {\ell \atop nq} \right\} X_\ell \right] \tag{40}$$

And since the covariant derivative of an arbitrary second order mixed tensor, Y_n^s, is [16]:

$$Y^s_{n|t} = \frac{\partial Y^s_n}{\partial X^t} + \left\{ {s \atop mt} \right\} Y^m_n - \left\{ {m \atop nt} \right\} Y^s_m \tag{41}$$

we have, from (40) and (41):

$$X_{n|pt} = g_{ps}\, X_{n|t}^{\;s} = g_{ps} \left\{ \frac{\partial}{\partial X^t} \left[g^{sq} \frac{\partial X_n}{\partial X^q} - g^{sq} \left\{ {\ell \atop nq} \right\} X_\ell \right] + \left\{ {s \atop mt} \right\} \left[g^{mq} \frac{\partial X_n}{\partial X^q} - g^{mq} \left\{ {\ell \atop nq} \right\} X_\ell \right] - \left\{ {m \atop nt} \right\} \left[g^{sq} \frac{\partial X_m}{\partial X^q} - g^{sq} \left\{ {\ell \atop mq} \right\} X_\ell \right] \right\} \tag{42}$$

In cylindrical coordinates, the Christoffel symbols and metric tensor take the following form [16]:

$$\left\{ {2 \atop 12} \right\} = \left\{ {2 \atop 21} \right\} = \frac{1}{X^1} \; ; \qquad \left\{ {1 \atop 22} \right\} = - X^1$$

$$\text{all other } \left\{ {n \atop \ell m} \right\} = 0$$

$$g_{11} = g_{33} = g^{11} = g^{33} = 1$$

$$g_{22} = (X^1)^2 \; ; \qquad g^{22} = \left(\frac{1}{X^1}\right)^2 \tag{43}$$

Equations (42) and (43) imply:

$$X_{n|pt} = X_{n|tp} \tag{44}$$

Therefore, with the aid of (43) and (44), (39) and (42) may be expanded to yield:

$$X_{1|1} = \frac{\partial X_1}{\partial \chi^1}$$

$$X_{2|2} = \frac{\partial X_2}{\partial \chi^2} + \chi^1 X_1$$

$$X_{1|2} = \frac{\partial X_1}{\partial \chi^2} - \frac{1}{\chi^1} X_2$$

$$X_{2|1} = \frac{\partial X_2}{\partial \chi^1} - \frac{1}{\chi^1} X_2$$

$$X_{3|2} = \frac{\partial X_3}{\partial \chi^2} \qquad X_{3|1} = \frac{\partial X_3}{\partial \chi^1} \tag{45}$$

and,

$$X_{1|11} = \frac{\partial^2 X_1}{\partial (\chi^1)^2}$$

$$X_{1|22} = \frac{\partial^2 X_1}{\partial (\chi^2)^2} - \frac{2}{\chi^1} \frac{\partial X_2}{\partial \chi^2} + \chi^1 \frac{\partial X_1}{\partial \chi^1} - X_1$$

$$X_{1|12} = \frac{\partial^2 X_1}{\partial \chi^1 \partial \chi^2} - \frac{1}{\chi^1} \frac{\partial X_1}{\partial \chi^2} + \frac{2X_2}{(\chi^1)^2} - \frac{1}{\chi^1} \frac{\partial X_2}{\partial \chi^1}$$

$$X_{2|11} = \frac{\partial^2 X_2}{\partial (\chi^1)^2} + \frac{2X_2}{(\chi^1)^2} - \frac{2}{\chi^1} \frac{\partial X_2}{\partial \chi^1}$$

$$X_{2|22} = \frac{\partial^2 X_2}{\partial (\chi^2)^2} + 2\chi^1 \frac{\partial X_1}{\partial \chi^2} + \chi^1 \frac{\partial X_2}{\partial \chi^1} - 2X_2$$

$$X_{2|12} = \frac{\partial^2 X_2}{\partial \chi^1 \partial \chi^2} - \frac{2}{\chi^1} \frac{\partial X_2}{\partial \chi^2} + \chi^1 \frac{\partial X_1}{\partial \chi^1} - X_1$$

$$X_{3|11} = \frac{\partial^2 X_3}{\partial (\chi^1)^2}$$

$$X_{3|12} = \frac{\partial^2 X_3}{\partial \chi^1 \partial \chi^2} - \frac{1}{\chi^1} \frac{\partial X_3}{\partial \chi^2}$$

$$X_{3|22} = \frac{\partial^2 X_3}{\partial (\chi^2)^2} + \chi^1 \frac{\partial X_3}{\partial \chi^1} \tag{46}$$

In order to make each equation of (45) and (46) dimensionally homogeneous, we replace the right-hand members by their physical components, $X_{(n)}$, through the relationship [16]:

$$X_{(n)} = \sqrt{g^{nn}}\, X_n \qquad \text{(No summation)} \tag{47}$$

where a bracketed index indicates physical component.

Furthermore, to ensure dimensional compatibility among equations, the following relations are used to introduce physical components to the left-hand members of equations (45) and (46):

$$X_{(n)|(\ell)} = \sqrt{g^{nn}}\, \sqrt{g^{\ell\ell}}\, X_{n|\ell}$$

$$X_{(n)|(\ell)(p)} = \sqrt{g^{nn}}\, \sqrt{g^{\ell\ell}}\, \sqrt{g^{pp}}\, X_{n|\ell p} \qquad \text{(No summation)} \tag{48}$$

The left-hand members of the resulting equations may be interpreted as cartesian components. Therefore, after replacing χ^1 by r, χ^2 by θ, $X_{(1)}$ by u_r, $X_{(2)}$ by u_θ, and $X_{(3)}$ by w in the right-hand members, and $X_{(1)}$ by u_x, $X_{(2)}$ by u_y, and $X_{(3)}$ by w in the left-hand members, transformation equations relating cartesian and polar coordinates take the following form:

$$u_x = u_r$$

$$u_y = u_\theta$$

$$u_{x|x} = u_{r,r}$$

$$u_{y|y} = \frac{1}{r} u_{\theta,\theta} + \frac{1}{r} u_r$$

$$u_{x|y} = \frac{1}{r} u_{r,\theta} - \frac{1}{r} u_\theta$$

$$u_{y|x} = u_{\theta,r}$$

$$w_{|x} = w_{,r}$$

$$w_{|y} = \frac{1}{r} w_{,\theta}$$

$$u_{x|xx} = u_{r,rr}$$

$$u_{x|yy} = \frac{1}{r^2} u_{r,\theta\theta} - \frac{2}{r^2} u_{\theta,\theta} + \frac{1}{r} u_{r,r} - \frac{1}{r^2} u_r$$

$$u_{x|xy} = \frac{1}{r} u_{r,r\theta} - \frac{1}{r^2} u_{r,\theta} - \frac{1}{r} u_{\theta,r} + \frac{1}{r^2} u_\theta$$

$$u_{y|xx} = u_{\theta,rr}$$

$$u_{y|yy} = \frac{1}{r^2} u_{\theta,\theta\theta} + \frac{2}{r^2} u_{r,\theta} + \frac{1}{r} u_{\theta,r} - \frac{1}{r^2} u_\theta$$

$$u_{y|xy} = \frac{1}{r} u_{\theta,r\theta} - \frac{1}{r^2} u_{\theta,\theta} + \frac{1}{r} u_{r,r} - \frac{1}{r^2} u_r$$

$$w_{|xx} = w_{,rr}$$

$$w_{|xy} = \frac{1}{r} w_{,r\theta} - \frac{1}{r^2} w_{,\theta}$$

$$w_{|yy} = \frac{1}{r^2} w_{,\theta\theta} + \frac{1}{r} w_{,r} \qquad (49)$$

In equation (49), r and θ are polar coordinates defined in the usual manner, while u_r, u_θ and w represent displacements in the directions associated with this new coordinate system.

2. Transformation of Equations

If we interpret the derivatives appearing in equations (37) and (38) as covariant derivatives and thereby transform them into polar coordinates using relations (49), we arrive at the following equilibrium equations:

$$- \hat{t}\, t_c G_c \left\{ \frac{2}{t_c} \left[\frac{1}{r} \frac{\partial}{\partial r} (r\, u_r) + \frac{1}{r} u_{\theta,\theta} \right] + \hat{t}\, \nabla^2 w \right\}$$

$$- \underline{N}_{rr}\, w_{,rr} - 2\underline{N}_{r\theta} \left(\frac{1}{r} w_{,r\theta} - \frac{1}{r^2} w_{,\theta} \right) - \underline{N}_{\theta\theta} \left(\frac{1}{r^2} w_{,\theta\theta} + \frac{1}{r} w_{,r} \right) = q$$

$$2G_c \left[\frac{2}{t_c} u_r + \hat{t}\, w_{,r} \right] - \frac{2t_f E_f}{1-\nu_f^2} \left[\nabla^2 u_r - \frac{1}{r^2} u_r + \left(\frac{\nu_f - 3}{2r^2} \right) u_{\theta,\theta} \right.$$

$$\left. + \frac{(1+\nu_f)}{2r} \left(u_{\theta,r\theta} - \frac{1}{r} u_{r,\theta\theta} \right) \right] = 0$$

$$2G_c \left[\frac{2}{t_c} u_\theta + \frac{\hat{t}}{r} w_{,\theta} \right] - \frac{t_f E_f}{1-\nu_f^2} \left[(1-\nu_f)(\nabla^2 u_\theta - \frac{1}{r^2} u_\theta) \right.$$

$$\left. + (1+\nu_f)\left(\frac{1}{r^2} u_{\theta,\theta\theta} + \frac{1}{r} u_{r,r\theta} \right) + \frac{(3-\nu_f)}{r^2} u_{r,\theta} \right] = 0 \qquad (50)$$

and boundary conditions,

$$\int^{\theta}\left\{2\hat{t}\,t_c G_c\left[\frac{u_r}{t_c}+\frac{\hat{t}}{2}\,w_{,r}\right]+\underline{N}_{rr}\,w_{,r}+\underline{N}_{r\theta}\,\frac{1}{r}\,w_{,\theta}\right\}\delta w\,n_r\,d\theta=0$$

$$\int^{\theta}\left\{\frac{2t_f E_f}{1-\nu_f^2}\left[u_{r,r}+\nu_f\left(\frac{1}{r}\,u_{\theta,\theta}+\frac{1}{r}\,u_r\right)\right]\right\}\delta u_r\,n_r\,d\theta=0$$

$$\int^{\theta}\left\{\frac{t_f E_f}{1+\nu_f}\left[\frac{1}{r}\,u_{r,\theta}-\frac{1}{r}\,u_\theta+u_{\theta,r}\right]\right\}\delta u_\theta\,n_r\,d\theta=0 \qquad (51)$$

where $\nabla^2=\dfrac{\partial^2}{\partial r^2}+\dfrac{1}{r}\dfrac{\partial}{\partial r}+\dfrac{1}{r^2}\dfrac{\partial^2}{\partial\theta^2}$

Since only complete annular or circular regions are to be considered, the use of continuous cyclical functions of θ eliminates the need to specify boundary conditions along a radial boundary.

In the present work, which investigates the buckling of annular sandwich panels, the transverse loading function, q, is not considered. Such a restriction does not limit the application of the obtained results, since, for small deflections, the transverse loading function does not influence the buckling load [3].

Finally, as a result of uniform compression along the inner and (or) outer boundaries, an axisymmetric buckling mode is assumed (B3) to result from the lowest critical axial load. Such an assumption has been shown by Olsson [12] to be valid for single-layer annular panels.

The governing equations thus become:

$$- \hat{t} t_c G_c \left\{ \frac{2}{t_c} \left[\frac{1}{r} \frac{d}{dr} (ru) \right] + \hat{t} \nabla^2 w \right\} - \frac{1}{r} \frac{d}{dr} \left(r \underline{N}_{rr} \frac{dw}{dr} \right) = 0 \tag{52}$$

$$2G_c \left[\frac{2}{t_c} u + \hat{t} \frac{dw}{dr} \right] - \frac{2t_f E_f}{1-\nu_f^2} \left[\frac{d^2u}{dr^2} + \frac{1}{r} \frac{du}{dr} - \frac{u}{r^2} \right] = 0 \tag{53}$$

$$\text{where} \qquad \nabla^2 = \frac{1}{r} \frac{d}{dr} \left(r \frac{d}{dr} \right)$$

and,

$$\int^{\theta} \left\{ 2\hat{t} t_c G_c \left[\frac{u}{t_c} + \frac{\hat{t}}{2} \frac{dw}{dr} \right] + \underline{N}_{rr} \frac{dw}{dr} \right\} \delta w \, n_r \, d\theta = 0 \tag{54}$$

$$\int^{\theta} \left\{ \frac{du}{dr} + \nu_f \frac{u}{r} \right\} \delta u \, n_r \, d\theta = 0 \tag{55}$$

In equations (52-55) the subscript r has been omitted from the displacement u, without confusion. Also, $\underline{N}_{\theta\theta}$ has been eliminated by considering the pre-buckling equilibrium of the face layers:

$$\frac{d\underline{N}_{rr}}{dr} + \frac{\underline{N}_{rr} - \underline{N}_{\theta\theta}}{r} = 0 \tag{56}$$

3. Axial Stress Distribution

For two-dimensional axisymmetric stress distribution in polar coordinates, the governing equations are [17]:

$$\frac{d^2\bar{u}}{dr^2} + \frac{1}{r} \frac{d\bar{u}}{dr} - \frac{\bar{u}}{r^2} = 0 \tag{57}$$

$$\underline{N}_{rr} = \frac{2t_f E_f}{1-\nu_f^2} \left(\frac{d\bar{u}}{dr} + \nu_f \frac{\bar{u}}{r} \right) \tag{58}$$

$$\underline{N}_{\theta\theta} = \frac{2t_f E_f}{1-\nu_f^2}\left(\frac{\bar{u}}{r} + \nu\,\frac{d\bar{u}}{dr}\right) \tag{59}$$

where $\bar{u}$ is the pre-buckling lateral displacement.

The general solution of equation (57) is:

$$\bar{u} = C_5 r + C_6/r \tag{60}$$

where C_5 and C_6 are arbitrary constants of integration. Substituting (60) into (58) yields:

$$\underline{N}_{rr} = \frac{2t_f E_f}{1-\nu_f^2}\left[C_5(1+\nu_f) - C_6\,\frac{(1-\nu_f)}{r^2}\right] \tag{61}$$

For the case of an annular panel subjected to uniform compression along the inner and outer boundaries (see Figure 2), boundary conditions are:

$$\begin{aligned} \underline{N}_{rr}\,(a) &= -N_i \\ \underline{N}_{rr}\,(b) &= -N_o \end{aligned} \tag{62}$$

where a and b are inner and outer radii, respectively, and N_i and N_o are inner and outer compressive forces per unit length, respectively.

Imposing boundary conditions (62) on equation (61), we obtain the following axial stress distribution:

$$\underline{N}_{rr} = \frac{D}{r^2} - E \tag{63}$$

$$\underline{N}_{\theta\theta} = -\frac{D}{r^2} - F \tag{64}$$

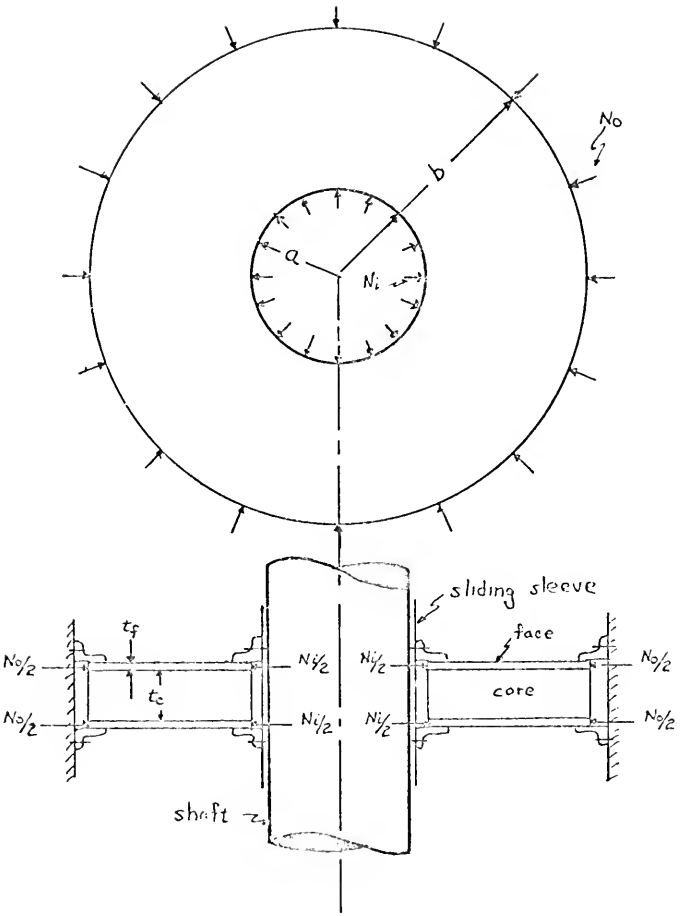

Figure 2. Annular Sandwich Panel

where,

$$D = \frac{b^2\beta^2(N_o - N_i)}{1 - \beta^2} \; ; \quad E = \frac{N_o - \beta^2 N_i}{1 - \beta^2} \tag{65}$$

and,

$$\beta = \frac{a}{b} \tag{66}$$

Since $\underline{N}_{rr}$ and $\underline{N}_{\theta\theta}$ are considered to be much larger than the forces produced by bending during buckling, the axial stress distribution remains essentially unchanged during buckling.

Also, if $a = \hat{\beta} = 0$, or $N_i = N_o$, it is easily verified that equations (63) and (64) reduce to:

$$\underline{N}_{rr} = \underline{N}_{\theta\theta} = - N_o \tag{67}$$

4. Reduced Equilibrium Equations

From Chapter IV, Section 2, the equilibrium equations (reproduced here for convenience) are:

$$- \hat{t} t_c G_c \left\{ \frac{2}{t_c} \left[\frac{1}{r} \frac{d}{dr} (ru) \right] + \hat{t} \nabla^2 w \right\} - \frac{1}{r} \frac{d}{dr} \left(r \underline{N}_{rr} \frac{dw}{dr} \right) = 0 \tag{52}$$

$$2G_c \left[\frac{2}{t_c} u + \hat{t} \frac{dw}{dr} \right] - \frac{2t_f E_f}{1-\nu_f^2} \left[\frac{d^2u}{dr^2} + \frac{1}{r} \frac{du}{dr} - \frac{u}{r^2} \right] = 0 \tag{53}$$

Zaid [9] and Huang and Ebcioglu [10] uncouple similar equations by operating on the second with the linear operator

$$L(\varphi) = \frac{1}{r} \frac{d}{dr} (r\varphi)$$

and eliminating the first large common bracket in both equations. The resulting equation is then directly integrated to yield:

$$u = \frac{1-\nu_f^2}{t_f t_c \hat{t} E_f}\left[-\frac{1}{r}\int r\int \underline{N}_{rr}\frac{dw}{dr}\,dr\,dr + \frac{C_1'}{2}\left(r\ln r - \frac{r}{2}\right) + \frac{C_2'}{2}r + \frac{C_3'}{r}\right] \tag{68}$$

where C_1', C_2', and C_3' are arbitrary constants of integration.

Equation (68) agrees with Huang and Ebcioglu's results if $\underline{N}_{rr}$ is defined by equation (67) instead of (63). It should be noted, however, that the uncoupling procedure described above yields five constants of integration, while only four boundary conditions are available. This is a direct result of the uncoupling procedure which initially increases the order of equation (53).

As a consequence of the above-mentioned complications and other considerations which will be discussed later, a different technique is employed in the present work to uncouple equations (52) and (53).

Multiplying equation (52) by r and integrating directly without the aid of equation (53), we obtain:

$$u = -\left[\frac{\hat{t}\,t_c}{2} + \frac{\underline{N}_{rr}}{2\hat{t}G_c}\right]\varphi + \frac{C_1}{2\hat{t}G_c}\frac{1}{r} \tag{69}$$

where,

$$\varphi = \frac{dw}{dr} \tag{70}$$

and C_1 is an arbitrary constant of integration.

Comparing equation (69) with equation (68), the advantage of simplicity becomes immediately evident. Also, it will be made clear in the following sections that the present procedure facilitates the application of boundary conditions, and suggests analogies between the classical single-layer plate theory and the present analysis of sandwich panels.

Substituting equation (69) into equation (53), with the aid of (63) and (70), we obtain, after some simplification:

$$(r^2+G)\,r^2\,\frac{d^2\varphi}{dr^2} + (r^2-3G)\,r\,\frac{d\varphi}{dr} + (Hr^4 - Ir^2 + 3G)\varphi = -\frac{BC_1 r^3}{F} \tag{71}$$

where,

$$G = \frac{D}{2F}\ ;\quad H = \frac{BE}{F}\ ;\quad I = \frac{F+BD}{F}\ ;\quad F = A - \frac{E}{2} \tag{72}$$

$$A = \frac{t_c \hat{t}^2 G_c}{2}\ ;\quad B = \frac{G_c(1-\nu_f^2)}{t_f t_c E_f} \tag{73}$$

and D and E are defined by equation (65).

Equations (69) and (71) represent the uncoupled equilibrium equations. Since (71) is a second order differential equation, two constants of integration are generated. Together with C_1 and the constant introduced through the integration of (70), we have four arbitrary constants of integration to be determined by boundary conditions at the inner and outer edges of the annular panel.

5. Boundary Conditions

From Chapter IV, Section 2, the boundary conditions (reproduced here for convenience) are:

$$\int^{\theta}\left\{2\hat{t}_c G_c \left[\frac{u}{t_c} + \frac{\hat{t}}{2}\frac{dw}{dr}\right] + \underline{N}_{rr}\frac{dw}{dr}\right\} \delta w \, n_r \, d\theta = 0 \qquad (54)$$

$$\int^{\theta}\left\{\frac{du}{dr} + \nu_f \frac{u}{r}\right\} \delta u \, n_r \, d\theta = 0 \qquad (55)$$

Integral (54) requires the specification of either the transverse deflection w, or the resultant shear stress along the inner and outer edges. Similarly, integral (55) requires the specification of either the relative lateral movement of one face with respect to the other, or the moment produced by tensile stresses on one face and compressive stresses on the other, along the inner and outer edges. Since we are neglecting the bending rigidity of the faces, the large bracket in integral (55) represents the total edge moment, while u becomes analogous to the slope, φ, used in the formulation of boundary conditions for the classical theory of single-layer circular plates [3].

Specifically, in the present work, integrals (54) and (55) are satisfied through the following choice of boundary conditions at the inner and outer edges:

$$\text{At } r = a: \quad u + \left[\frac{\hat{t}t_c}{2} + \frac{\underline{N}_{rr}}{2\hat{t}G_c}\right]\varphi = 0 \; ; \qquad u = 0 \qquad (74)$$

$$\text{At } r = b: \quad w = 0 \; ; \qquad u = 0 \qquad (75)$$

Conditions (75) are analogous to boundary conditions termed clamped or built-in in the classical theory, while conditions (74), termed "slider" in the present work, have previously been employed for stability analysis of sandwich columns [1] and single-layer annular panels [12]. Physically, such a restriction could be approximated by allowing a shaft or rigid cylinder to occupy the central hole (see Figure 2).

As the inner radius, a, shrinks to zero, conditions (74) become identical to boundary conditions present at the center of a circular sandwich panel, without central hole, constrained along the outer edge only. This limiting process provides a check for our final results since the stability problem associated with such a panel yields a relatively simple solution.

6. Comparison with Other Theories

Comparison of the present work with existing theories can be facilitated through the use of Table 1. Referring to this table, an analogy between single-layer theory and sandwich theory is observed. Meissner's [11] equation, which can be solved by means of bessel functions, is reduced to a homogeneous differential equation ($k = 0$) if the shear resultant is made to vanish at any arbitrary radius. This becomes immediately evident if we compare the boundary condition which specifies zero shear with the second form of the equilibrium equation. Consequently, since the shear at the center of a circular panel must vanish because of symmetry, Timoshenko's [3] bessel equation of order one is a homogeneous differential equation.

TABLE 1

COMPARISON OF EQUATIONS GOVERNING STABILITY OF SINGLE-LAYER PANELS AND SANDWICH PANELS

	Single-Layer Panel	Sandwich Panel
Equilibrium Equations for Annular Region	Meissner [11]: $r^2 \frac{d^2\varphi}{dr^2} + r\frac{d\varphi}{dr} + \left[\frac{Et_f}{D_f} r^2 - \left(1 + \frac{Dt_f}{D_f}\right)\right]\varphi = \frac{k}{r}$ or $\left\{\frac{d}{dr}(\nabla^2 w) + \underline{N}_{rr}\varphi = \frac{k}{r}\right\}$ k = arbitrary constant	Equation (71): $(r^2+G)r^2\frac{d^2\varphi}{dr^2} + (r^2-3G)r\frac{d\varphi}{dr} + (Hr^4-Ir^2+3G)\varphi = -\frac{BC_1 r^3}{F}$ Equation (69): $u = -\left[\frac{\hat{t}t_c}{2} + \frac{\underline{N}_{rr}}{2\hat{t}G_c}\right]\varphi + \frac{C_1}{2\hat{t}G_c}\frac{1}{r}$
Boundary Condition Specifying Zero Shear	Meissner [11]: $\frac{d}{dr}(\nabla^2 w) + \underline{N}_{rr}\varphi = 0$	Equation (74): $u + \left[\frac{\hat{t}t_c}{2} + \frac{\underline{N}_{rr}}{2\hat{t}G_c}\right]\varphi = 0$
Equilibrium Equations for Circular Region	Timoshenko [3]: $r^2\frac{d^2\varphi}{dr^2} + r\frac{d\varphi}{dr} + \left(\frac{N_o}{D_f}r^2 - 1\right)\varphi = 0$	Huang and Ebcioglu [10]: Equation (80): $r^2\frac{d^2\varphi}{dr^2} + r\frac{d\varphi}{dr} + \left[\frac{BN_o}{A-(N_o/2)}r^2 - 1\right]\varphi = 0$ Equation (81): $u = -\left[\frac{\hat{t}t_c}{2} - \frac{N_o}{2\hat{t}G_c}\right]\varphi$

Analogously, one of two equilibrium equations describing an annular region for a sandwich panel reduces to a homogeneous equation ($C_1 = 0$) if the shear resultant is specified to vanish at some arbitrary radius. Such a simplification also provides a direct correspondence between u and φ (see equation (69)). In the case of a circular sandwich panel, a homogeneous equation again results as a consequence of the symmetry involved, and one of the two equilibrium equations yields bessel functions of order one, as is the case in the single layer theory.

The second equilibrium equation for a circular sandwich panel, which is attributed to Huang and Ebcioglu, is deduced from equation (69) rather than the original form in which it appeared (see equation (68)). Consequently, without employing the present uncoupling technique, the above stated analogies would not be evident.

Since the present work deals with an annular sandwich panel, it becomes obvious that bessel functions cannot be employed unless $N_o = N_i$ (see Equations (65) and (67)). Solutions for this special case and the more general case are obtained in Chapter V.

CHAPTER V

AXISYMMETRIC BUCKLING OF ANNULAR SANDWICH PANELS

1. Uniform Axial Stress Distribution

If the pressure along the inner edge of the annular sandwich panel is equal to the pressure along the outer edge, or:

$$N_i = N_o \tag{76}$$

then, from (65), (67) and (72):

$$\begin{gathered} D = G = 0 \; ; \quad I = 1 \; ; \quad E = N_o \\ \underline{N}_{rr} = - N_o \; ; \quad F = A - \frac{N_o}{2} \; ; \quad H = \frac{BN_o}{A-(N_o/2)} \end{gathered} \tag{77}$$

which reduces equations (71) and (69) to:

$$r^2 \frac{d^2\varphi}{dr^2} + r\frac{d\varphi}{dr} + \left[\frac{BN_o}{A-(N_o/2)} r^2 - 1\right]\varphi = - \frac{BC_1 r}{A-(N_o/2)} \tag{78}$$

$$u = - \left[\frac{\hat{t}t_c}{2} - \frac{N_o}{2\hat{t}G_c}\right]\varphi + \frac{C_1}{2\hat{t}G_c}\frac{1}{r} \tag{79}$$

Applying the first of boundary conditions (74) to equation (79) immediately reduces (78) and (79) to:

$$r^2 \frac{d^2\varphi}{dr^2} + r\frac{d\varphi}{dr} + \left[\frac{BN_o r^2}{A-(N_o/2)} - 1\right]\varphi = 0 \tag{80}$$

$$u = -\left[\frac{\hat{t}t_c}{2} - \frac{N_o}{2\hat{t}G_c}\right]\varphi \tag{81}$$

Since (80) is Bessel's equation of order one, a general solution of equations (80) and (81) takes the following form [18]:

$$\varphi = A_1 J_1\left[\left(\frac{BN_o}{A-(N_o/2)}\right)^{\frac{1}{2}} r\right] + A_2 Y_1\left[\left(\frac{BN_o}{A-(N_o/2)}\right)^{\frac{1}{2}} r\right] \tag{82}$$

$$u = -\left[\frac{\hat{t}t_c}{2} - \frac{N_o}{2\hat{t}G_c}\right]\left\{A_1 J_1\left[\left(\frac{BN_o}{A-(N_o/2)}\right)^{\frac{1}{2}} r\right] + A_2 Y_1\left[\left(\frac{BN_o}{A-(N_o/2)}\right)^{\frac{1}{2}} r\right]\right\} \tag{83}$$

where J_1 and Y_1 are bessel functions of order one of the first and second kind, respectively, and A_1 and A_2 are arbitrary constants of integration.

If we now impose the remainder of boundary conditions (74) and (75) on equations (82) and (83), we have:

$$\begin{aligned} -\left[\frac{\hat{t}t_c}{2} - \frac{(N_o)_{cr}}{2\hat{t}G_c}\right]\left[A_1 J_1(\mu\beta) + A_2 Y_1(\mu\beta)\right] &= 0 \\ -\left[\frac{\hat{t}t_c}{2} - \frac{(N_o)_{cr}}{2\hat{t}G_c}\right]\left[A_1 J_1(\mu) + A_2 Y_1(\mu)\right] &= 0 \end{aligned} \tag{84}$$

where

$$\mu = \left(\frac{B(N_o)_{cr}}{A-[(N_o)_{cr}/2]}\right)^{\frac{1}{2}} b \; ; \quad \beta = \frac{a}{b} \tag{85}$$

These equations can be satisfied by taking $A_1 = A_2 = 0$. Then the deflection at each point of the panel is zero and we obtain the trivial, undeflected form of equilibrium of the panel. The buckling form of equilibrium of the panel becomes possible only if equations (84) yield values for A_1 and A_2 different from zero, which requires that the determinant of the coefficients of these constants vanish. Therefore, after multiplying by $(4/t_c\hat{t})$ and considering the first of equations (73), our critical condition becomes:

$$\left[\left(\frac{N_o}{A}\right)_{cr} - 2\right]^2 \left[J_1(\mu)Y_1(\mu\beta) - J_1(\mu\beta)Y_1(\mu)\right] = 0 \qquad (86)$$

Equation (86) closely resembles the critical condition obtained by Olsson [12] for a single-layer panel constrained in a similar manner.

For a given value of β, the smallest corresponding value of μ for which the second large bracket in equation (86) vanishes is given in Table 2 below [12].

TABLE 2

LOWEST VALUE OF μ SATISFYING EQUATION (86)

β	0.0000	0.0256	0.0526	0.0909	0.1000
μ	3.832	3.840	3.860	3.924	3.942
β	0.1111	0.1250	0.1433	0.1667	0.2000
μ	3.966	4.000	4.045	4.116	4.235
β	0.2500	0.3333	0.3956	0.5000	0.5461
μ	4.445	4.905	5.355	6.394	7.016
β	0.6285	0.6897	0.7634	0.8333	1.000
μ	8.523	10.175	13.312	18.873	∞

And, from the first of (85):

$$\left(\frac{N_o}{A}\right)_{cr} = \frac{\mu^2}{b^2B+\mu^2/2} \tag{87}$$

It can be shown that $(N_o/A)_{cr}$ given by equation (87) is a monotonic increasing function of μ. Therefore, the lowest value of μ results in the lowest value of $(N_o/A)_{cr}$. Also, since b^2B is always positive, equation (87) yields values of $(N_o/A)_{cr}$ which are greater than or equal to two; and we can therefore conclude that the lowest root of equation (86) is always given by equation (87) in conjunction with Table 2. (See Figure 3.)

The first of boundary conditions (75) has not been used to obtain the above results since the buckling load is independent of a transverse translation of the panel as a whole. In this respect our analysis parallels the classical single-layer theory [3].

For $a = \hat{\beta} = 0$, equation (87) becomes:

$$\left(\frac{N_o}{A}\right)_{cr} = \frac{(3.832)^2}{b^2B+(3.832)^2/2} \tag{88}$$

Equation (88) agrees with Huang and Ebcioglu's [10] results if the present notation is used. The validity of this limiting process was discussed in Section 5 of Chapter IV.

As G_c approaches a very large value, the first term in the denominator of equation (87) becomes dominant, and we obtain:

$$(N_o)_{cr} = \frac{\mu^2 D'}{b^2} \tag{89}$$

where the "effective bending rigidity," D', is defined:

$$D' = \frac{\hat{t}^2 t_c^2 t_f E_f}{2(1-\nu_f^2)} \tag{90}$$

Equation (89) in conjunction with Table 2 agrees with the results obtained by Olsson [12] for a single-layer annular panel subjected to uniform inner and outer axial pressures of equal intensity.

For $a = \beta = 0$, equation (89) becomes:

$$(N_o)_{cr} = \frac{(3.832)^2 D'}{b^2} \tag{91}$$

Equation (91) is identical to the buckling load obtained by Timoshenko [3] for a circular single-layer panel clamped along the outer edge.

This limiting process is intuitively expected, since, for $G_c = \infty$, the only structural function of the core is to control the distance between the face layers. A similar relationship exists between the web and flanges of an I-beam.

2. General Solution

We now return to a general solution of equations (69) and (71). Introducing the dimensionless variable, η, through the transformation:

$$\eta = r/b \tag{92}$$

equation (71) becomes:

$$\eta^2(N\eta^2+1)\frac{d^2\varphi}{d\eta^2} + \eta(N\eta^2-3)\frac{d\varphi}{d\eta} + (R\eta^4-Q\eta^2+3)\varphi = -\frac{b^2BC_1\eta}{GF} \tag{93}$$

where,

$$N = \frac{b^2}{G}\ ; \qquad R = b^2HN\ ; \qquad Q = IN \tag{94}$$

Similarly, equation (69) becomes:

$$u = -\left[\frac{\hat{t}t_c}{2} + \frac{N_{rr}}{2\hat{t}G_c}\right]\varphi + \frac{C_1}{2b\hat{t}G_c}\frac{1}{\eta} \tag{95}$$

Since we seek a series solution of equation (93), and choose to expand our series about the point $\eta = 1$, the following additional transformation is introduced:

$$\xi = \eta - 1 \tag{96}$$

The reasons for seeking a solution about the point $\eta = 1$ ($\xi = 0$) will be discussed in Sections 5 and 6 of this chapter.

With the aid of equation (96), and after some simplification, equation (93) becomes:

$$[(N+1) + 2(2N+1)\xi + (6N+1)\xi^2 + 4N\xi^3 + N\xi^4]\frac{d^2\varphi}{d\xi^2} + [(N-3)$$

$$+ 3(N-1)\xi + 3N\xi^2 + N\xi^3]\frac{d\varphi}{d\xi} + [(R-Q+3) + (4R-2Q)\xi$$

$$+ (6R-Q)\xi^2 + 4R\xi^3 + R\xi^4]\varphi = -\frac{b^2BC_1(1+\xi)}{GF} \tag{97}$$

To obtain a complementary solution of equation (97) the following infinite series is employed [18]:

$$\varphi_c = \sum_{k=0}^{\infty} A_k \xi^k \tag{98}$$

where the coefficients A_k are functions of the elastic and geometric properties of the panel and the critical buckling load. The radius of convergence of series (98) can be shown (see Section 6, Chapter V) to be of sufficient magnitude for our particular problem.

Substituting (98) into a homogeneous form of equation (97), and collecting coefficients of common powers of ξ, we have:

$$\begin{aligned}
&\Big\{[2(N+1)A_2 + (N-3)A_1 + (R-Q+3)A_o] + [6(N+1)A_3 + 2(5N-1)A_2 \\
&+ (R-Q+3N)A_1 + (4R-2Q)A_o]\xi + [12(N+1)A_4 + (27N+3)A_3 \\
&+ (R-Q+18N-1)A_2 + (4R-2Q+3N)A_1 + (6R-Q)A_o]\xi^2 \\
&+ [20(N+1)A_5 + 4(13N+3)A_4 + (45N+R-Q)A_3 \\
&+ (14N+4R-2Q)A_2 + (N+6R-Q)A_1 + 4RA_o]\xi^3 \\
&+ \ldots\ldots\ldots\ldots\Big\} = 0
\end{aligned} \tag{99}$$

In order that this series vanish for all values of ξ in some region surrounding $\xi = 0$, it is necessary and sufficient that the coefficients of each power of ξ vanish [18]. This produces the following relations in which some coefficients have been eliminated through the accumulative introduction of previously computed coefficients:

$$A_2 = -\frac{(R-Q+3)}{2(N+1)} A_o - \frac{(N-3)}{2(N+1)} A_1 \tag{100}$$

$$A_3 = \left[\frac{(5N-1)(R-Q+3)}{6(N+1)^2} - \frac{(4R-2Q)}{6(N+1)}\right] A_o + \left[\frac{(5N-1)(N-3)}{6(N+1)^2} - \frac{(R-Q+3N)}{6(N+1)}\right] A_1 \tag{101}$$

$$\begin{aligned} A_4 = \Bigg[& -\frac{(6R-Q)}{12(N+1)} + \frac{(R-Q+3)(R-Q+18N-1)}{24(N+1)^2} + \frac{(27N+3)(4R-2Q)}{72(N+1)^2} \\ & - \frac{(27N+3)(5N-1)(R-Q+3)}{72(N+1)^3}\Bigg] A_o + \Bigg[-\frac{(4R-2Q+3N)}{12(N+1)} + \frac{(N-3)(R-Q+18N-1)}{24(N+1)^2} \\ & + \frac{(27N+3)(R-Q+3N)}{72(N+1)^2} - \frac{(27N+3)(5N-1)(N-3)}{72(N+1)^3}\Bigg] A_1 \end{aligned} \tag{102}$$

$$\begin{aligned} A_5 = \Bigg[& \frac{(13N+3)(6R-Q)}{60(N+1)^2} - \frac{(13N+3)(R-Q+3)(R-Q+18N-1)}{120(N+1)^3} \\ & - \frac{(13N+3)(27N+3)(4R-2Q)}{360(N+1)^3} + \frac{(13N+3)(27N+3)(5N-1)(R-Q+3)}{360(N+1)^4} \\ & - \frac{(45N+R-Q)(5N-1)(R-Q+3)}{120(N+1)^3} + \frac{(45N+R-Q)(4R-2Q)}{120(N+1)^2} + \frac{(R-Q+3)(14N+4R-2Q)}{40(N+1)^2} \\ & - \frac{4R}{20(N+1)}\Bigg] A_o + \Bigg[\frac{(13N+3)(4R-2Q+3N)}{60(N+1)^2} - \frac{(13N+3)(N-3)(R-Q+18N-1)}{120(N+1)^3} \\ & - \frac{(13N+3)(27N+3)(R-Q+3N)}{360(N+1)^3} + \frac{(13N+3)(27N+3)(5N-1)(N-3)}{360(N+1)^4} \\ & - \frac{(45N+R-Q)(5N-1)(N-3)}{120(N+1)^3} + \frac{(45N+R-Q)(R-Q+3N)}{120(N+1)^2} \\ & + \frac{(N-3)(14N+4R-2Q)}{40(N+1)^2} - \frac{(N+6R-Q)}{20(N+1)}\Bigg] A_1 \end{aligned} \tag{103}$$

. . . . . .

. . . . . .

$A_k =$ . . . . . .

where A_o and A_1 remain arbitrary.

Because of the complexity of the computations, and the immediate requirements, no recursion formula is sought in the present analysis.

With the aid of (100-103), our complementary solution becomes:

$$
\begin{aligned}
\varphi_c(\xi) = A_o\Big\{1 &- \frac{(R-Q+3)}{2(N+1)}\xi^2 + \left[\frac{(5N-1)(R-Q+3)}{6(N+1)^2} - \frac{(4R-2Q)}{6(N+1)}\right]\xi^3 \\
&+ \left[-\frac{(6R-Q)}{12(N+1)} + \frac{(R-Q+3)(R-Q+18N-1)}{24(N+1)^2} + \frac{(27N+3)(4R-2Q)}{72(N+1)^2}\right. \\
&\left. - \frac{(27N+3)(5N-1)(R-Q+3)}{72(N+1)^3}\right]\xi^4 + \left[\frac{(13N+3)(6R-Q)}{60(N+1)^2}\right. \\
&- \frac{(13N+3)(R-Q+3)(R-Q+18N-1)}{120(N+1)^3} - \frac{(13N+3)(27N+3)(4R-2Q)}{360(N+1)^3} \\
&+ \frac{(13N+3)(27N+3)(5N-1)(R-Q+3)}{360(N+1)^4} - \frac{(45N+R-Q)(5N-1)(R-Q+3)}{120(N+1)^3} \\
&\left. + \frac{(45N+R-Q)(4R-2Q)}{120(N+1)^2} + \frac{(R-Q+3)(14N+4R-2Q)}{40(N+1)^2} - \frac{4R}{20(N+1)}\right]\xi^5 + \ldots\Big\} \\
+ A_1\Big\{\xi &- \frac{(N-3)}{2(N+1)}\xi^2 + \left[\frac{(5N-1)(N-3)}{6(N+1)^2} - \frac{(R-Q+3N)}{6(N+1)}\right]\xi^3 \\
&+ \left[-\frac{(4R-2Q+3N)}{12(N+1)} + \frac{(N-3)(R-Q+18N-1)}{24(N+1)^2} + \frac{(27N+3)(R-Q+3N)}{72(N+1)^2}\right. \\
&\left. - \frac{(27N+3)(5N-1)(N-3)}{72(N+1)^3}\right]\xi^4 + \left[\frac{(13N+3)(4R-2Q+3N)}{60(N+1)^2}\right. \\
&- \frac{(13N+3)(N-3)(R-Q+18N-1)}{120(N+1)^3} - \frac{(13N+3)(27N+3)(R-Q+3N)}{360(N+1)^3} \\
&+ \frac{(13N+3)(27N+3)(5N-1)(N-3)}{360(N+1)^4} - \frac{(45N+R-Q)(5N-1)(N-3)}{120(N+1)^3} \\
&\left. + \frac{(45N+R-Q)(R-Q+3N)}{120(N+1)^2} + \frac{(N-3)(14N+4R-2Q)}{40(N+1)^2} - \frac{(N+6R-Q)}{20(N+1)}\right]\xi^5 \\
&+ \ldots\ldots\ldots\Big\}
\end{aligned}
\tag{104}
$$

Following a procedure similar to that employed in the previous section, equations (95) and (104), together with a particular solution of equation (97), are constrained according to boundary conditions (74) and (75).

Imposing the first of boundary conditions (74) on equation (95) eliminates the need to find a particular solution of equation (97), since we have $C_1 = 0$. The subscript c can therefore be eliminated from equation (98) and our solution becomes a complete solution.

From equations (92) and (96), we note that at $r = b$, $\eta = 1$ and $\xi = 0$. Therefore, from equation (95), recalling that $C_1 = 0$ and $N_{rr}(b) = - N_o$ (see equation (62)), the second of boundary conditions (75) becomes:

$$\left[\left(\frac{N_o}{A}\right) - 2\right] \varphi \ (\xi=0) = 0 \tag{105}$$

And since $(N_o/A) \neq 2$ in general, condition (105) imposed on equation (104) yields $A_o = 0$

Similarly, the second of boundary conditions (74), evaluated at $r = a$ $(\xi = \beta-1)$, and expressed through equation (95) becomes:

$$\left[\left(\frac{N_i}{A}\right) - 2\right] \varphi \ (\xi = \beta-1) = 0 \tag{106}$$

After substituting equation (104) into (106) with $A_o = 0$, and noting that in general $(N_i/A) \neq 2$, we arrive at the general buckling criteria for an annular sandwich panel:

$$A_1\Bigg\{(\beta-1) - \frac{(N-3)}{2(N+1)}(\beta-1)^2 + \left[\frac{(5N-1)(N-3)}{6(N+1)^2} - \frac{(R-Q+3N)}{6(N+1)}\right](\beta-1)^3$$

$$+\left[-\frac{(4R-2Q+3N)}{12(N+1)} + \frac{(N-3)(R-Q+18N-1)}{24(N+1)^2} + \frac{(27N+3)(R-Q+3N)}{72(N+1)^2}\right.$$

$$\left.-\frac{(27N+3)(5N-1)(N-3)}{72(N+1)^3}\right](\beta-1)^4 + \left[\frac{(13N+3)(4R-2Q+3N)}{60(N+1)^2}\right.$$

$$-\frac{(13N+3)(N-3)(R-Q+18N-1)}{120(N+1)^3} - \frac{(13N+3)(27N+3)(R-Q+3N)}{360(N+1)^3}$$

$$+\frac{(13N+3)(27N+3)(5N-1)(N-3)}{360(N+1)^4} - \frac{(45N+R-Q)(5N-1)(N-3)}{120(N+1)^3}$$

$$\left.+\frac{(45N+R-Q)(R-Q+3N)}{120(N+1)^2} + \frac{(N-3)(14N+4R-2Q)}{40(N+1)^2} - \frac{(N+6R-Q)}{20(N+1)}\right](\beta-1)^5$$

$$+\ .\ .\ .\ .\ .\ .\ .\ .\ .\Bigg\} = 0 \qquad (107)$$

As explained in the previous section, the undeflected form of a panel in equilibrium, i.e., When $A_1 = 0$, is of little interest. Therefore, approximate critical buckling loads of the panel under discussion may be computed by considering a finite number of terms in equation (107).

The first of boundary conditions (75), as stated earlier, is not used in obtaining the above results, since the buckling load is independent of a transverse translation of the panel as a whole.

3. Successive Approximations

From equations (94), (72) and (65), we have:

$$N = \frac{2A(1-\beta^2)}{\beta^2(N_o-N_i)} - \frac{(N_o-\beta^2 N_i)}{\beta^2(N_o-N_i)} \tag{108}$$

$$R = \frac{2b^2B}{\beta^2} \frac{(N_o-\beta^2 N_i)}{(N_o-N_i)} \tag{109}$$

$$Q = \frac{2A(1-\beta^2)}{\beta^2(N_o-N_i)} - \frac{(N_o-\beta^2 N_i)}{\beta^2(N_o-N_i)} + 2b^2B \tag{110}$$

We designate the first approximation to be that which considers only the first term of the infinite series (107), and consecutively add a term for each succeeding approximation. Therefore, with the aid of (108-110), and after some simplification, we have:

First Approximation

The first approximation yields no results since the loading functions are not present in the first term of series (107).

Second Approximation

$$\frac{4A(1-\beta^2)}{\beta^2[(N_o)_{cr}-(N_i)_{cr}]} - \frac{2[(N_o)_{cr}-\beta^2(N_i)_{cr}]}{\beta^2[(N_o)_{cr}-(N_i)_{cr}]} + 2$$

$$- (\beta-1)\left[\frac{2A(1-\beta^2)}{\beta^2[(N_o)_{cr}-(N_i)_{cr}]} - \frac{[(N_o)_{cr}-\beta^2(N_i)_{cr}]}{\beta^2[(N_o)_{cr}-(N_i)_{cr}]} - 3\right] = 0 \tag{111}$$

Third Approximation

$$6\left[\frac{2A(1-\beta^2)}{\beta^2[(N_o)_{cr}-(N_i)_{cr}]} - \frac{[(N_o)_{cr}-\beta^2(N_i)_{cr}]}{\beta^2[(N_o)_{cr}-(N_i)_{cr}]} + 1\right]^2 - 3\left[\frac{2A(1-\beta^2)}{\beta^2[(N_o)_{cr}-(N_i)_{cr}]}\right.$$

$$\left. - \frac{[(N_o)_{cr}-\beta^2(N_i)_{cr}]}{\beta^2[(N_o)_{cr}-(N_i)_{cr}]} + 1\right]\left[\frac{2A(1-\beta^2)}{\beta^2[(N_o)_{cr}-(N_i)_{cr}]} - \frac{[(N_o)_{cr}-\beta^2(N_i)_{cr}]}{\beta^2[(N_o)_{cr}-(N_i)_{cr}]} - 3\right](\beta-1)$$

$$+\left[\frac{10A(1-\beta^2)}{\beta^2[(N_o)_{cr}-(N_i)_{cr}]} - \frac{5[(N_o)_{cr}-\beta^2(N_i)_{cr}]}{\beta^2[(N_o)_{cr}-(N_i)_{cr}]} - 1\right]\left[\frac{2A(1-\beta^2)}{\beta^2[(N_o)_{cr}-(N_i)_{cr}]} -\right.$$

$$\left. - \frac{[(N_o)_{cr}-\beta^2(N_i)_{cr}]}{\beta^2[(N_o)_{cr}-(N_i)_{cr}]} - 3\right](\beta-1)^2 - \left[\frac{2A(1-\beta^2)}{\beta^2[(N_o)_{cr}-(N_i)_{cr}]} - \frac{[(N_o)_{cr}-\beta^2(N_i)_{cr}]}{\beta^2[(N_o)_{cr}-(N_i)_{cr}]}\right.$$

$$\left. + 1\right]\left[\frac{4A(1-\beta^2)}{\beta^2[(N_o)_{cr}-(N_i)_{cr}]} - \frac{2[(N_o)_{cr}-\beta^2(N_i)_{cr}]}{\beta^2[(N_o)_{cr}-(N_i)_{cr}]} + \frac{2b^2B[(N_o)_{cr}-\beta^2(N_i)_{cr}]}{\beta^2[(N_o)_{cr}-(N_i)_{cr}]}\right.$$

$$\left. - 2b^2B\right](\beta-1)^2 = 0 \qquad (112)$$

Fourth Approximation

$$72\left[\frac{2A(1-\beta^2)}{\beta^2[(N_o)_{cr}-(N_i)_{cr}]} - \frac{[(N_o)_{cr}-\beta^2(N_i)_{cr}]}{\beta^2[(N_o)_{cr}-(N_i)_{cr}]} + 1\right]^3$$

$$- 36\left[\frac{2A(1-\beta^2)}{\beta^2[(N_o)_{cr}-(N_i)_{cr}]} - \frac{[(N_o)_{cr}-\beta^2(N_i)_{cr}]}{\beta^2[(N_o)_{cr}-(N_i)_{cr}]} - 3\right]\left[\frac{2A(1-\beta^2)}{\beta^2[(N_o)_{cr}-(N_i)_{cr}]}\right.$$

$$\left. - \frac{[(N_o)_{cr}-\beta^2(N_i)_{cr}]}{\beta^2[(N_o)_{cr}-(N_i)_{cr}]} + 1\right]^2(\beta-1) + \left\{12\left[\frac{10A(1-\beta^2)}{\beta^2[(N_o)_{cr}-(N_i)_{cr}]}\right.\right.$$

$$- \frac{5[(N_o)_{cr} - \beta^2 (N_i)_{cr}]}{\beta^2 [(N_o)_{cr} - (N_i)_{cr}]} - 1 \Bigg] \Bigg[\frac{2A(1-\beta^2)}{\beta^2 [(N_o)_{cr} - (N_i)_{cr}]} - \frac{[(N_o)_{cr} - \beta^2 (N_i)_{cr}]}{\beta^2 [(N_o)_{cr} - (N_i)_{cr}]} - 3 \Bigg]$$

$$\cdot \Bigg[\frac{2A(1-\beta^2)}{\beta^2 [(N_o)_{cr} - (N_i)_{cr}]} - \frac{[(N_o)_{cr} - \beta^2 (N_i)_{cr}]}{\beta^2 [(N_o)_{cr} - (N_i)_{cr}]} + 1 \Bigg] - 12 \Bigg[\frac{2A(1-\beta^2)}{\beta^2 [(N_o)_{cr} - (N_i)_{cr}]}$$

$$- \frac{[(N_o)_{cr} - \beta^2 (N_i)_{cr}]}{\beta^2 [(N_o)_{cr} - (N_i)_{cr}]} + 1 \Bigg]^2 \Bigg[\frac{4A(1-\beta^2)}{\beta^2 [(N_o)_{cr} - (N_i)_{cr}]} - \frac{2[(N_o)_{cr} - \beta^2 (N_i)_{cr}]}{\beta^2 [(N_o)_{cr} - (N_i)_{cr}]}$$

$$+ \frac{2b^2 B[(N_o)_{cr} - \beta^2 (N_i)_{cr}]}{\beta^2 [(N_o)_{cr} - (N_i)_{cr}]} - 2b^2 B \Bigg] \Bigg\} (\beta - 1)^2 + \Bigg\{ - 6 \Bigg[\frac{2A(1-\beta^2)}{\beta^2 [(N_o)_{cr} - (N_i)_{cr}]}$$

$$- \frac{[(N_o)_{cr} - \beta^2 (N_i)_{cr}]}{\beta^2 [(N_o)_{cr} - (N_i)_{cr}]} + 1 \Bigg]^2 \Bigg[\frac{2A(1-\beta^2)}{\beta^2 [(N_o)_{cr} - (N_i)_{cr}]} - \frac{[(N_o)_{cr} - \beta^2 (N_i)_{cr}]}{\beta^2 [(N_o)_{cr} - (N_i)_{cr}]}$$

$$+ \frac{8b^2 B}{\beta^2} \frac{[(N_o)_{cr} - \beta^2 (N_i)_{cr}]}{[(N_o)_{cr} - (N_i)_{cr}]} - 4b^2 B \Bigg] + 3 \Bigg[\frac{2A(1-\beta^2)}{\beta^2 [(N_o)_{cr} - (N_i)_{cr}]}$$

$$- \frac{[(N_o)_{cr} - \beta^2 (N_i)_{cr}]}{\beta^2 [(N_o)_{cr} - (N_i)_{cr}]} + 1 \Bigg] \Bigg[\frac{2A(1-\beta^2)}{\beta^2 [(N_o)_{cr} - (N_i)_{cr}]} - \frac{[(N_o)_{cr} - \beta^2 (N_i)_{cr}]}{\beta^2 [(N_o)_{cr} - (N_i)_{cr}]} - 3 \Bigg]$$

$$\cdot \Bigg[\frac{34A(1-\beta^2)}{\beta^2 [(N_o)_{cr} - (N_i)_{cr}]} - \frac{17[(N_o)_{cr} - \beta^2 (N_i)_{cr}]}{\beta^2 [(N_o)_{cr} - (N_i)_{cr}]} + \frac{2b^2 B}{\beta^2} \frac{[(N_o)_{cr} - \beta^2 (N_i)_{cr}]}{[(N_o)_{cr} - (N_i)_{cr}]}$$

$$- 2b^2 B - 1 \Bigg] + \Bigg[\frac{2A(1-\beta^2)}{\beta^2 [(N_o)_{cr} - (N_i)_{cr}]} - \frac{[(N_o)_{cr} - \beta^2 (N_i)_{cr}]}{\beta^2 [(N_o)_{cr} - (N_i)_{cr}]} + 1 \Bigg]$$

$$\cdot \Bigg[\frac{54A(1-\beta^2)}{\beta^2 [(N_o)_{cr} - (N_i)_{cr}]} - \frac{27[(N_o)_{cr} - \beta^2 (N_i)_{cr}]}{\beta^2 [(N_o)_{cr} - (N_i)_{cr}]} + 3 \Bigg] \Bigg[\frac{4A(1-\beta^2)}{\beta^2 [(N_o)_{cr} - (N_i)_{cr}]}$$

$$- \frac{2[(N_o)_{cr}-\beta^2(N_i)_{cr}]}{\beta^2[(N_o)_{cr}-(N_i)_{cr}]} + \frac{2b^2B[(N_o)_{cr}-\beta^2(N_i)_{cr}]}{\beta^2[(N_o)_{cr}-(N_i)_{cr}]} - 2b^2B\Bigg] - \Bigg[\frac{54A(1-\beta^2)}{\beta^2[(N_o)_{cr}-(N_i)_{cr}]}$$

$$- \frac{27[(N_o)_{cr}-\beta^2(N_i)_{cr}]}{\beta^2[(N_o)_{cr}-(N_i)_{cr}]} + 3\Bigg]\Bigg[\frac{10A(1-\beta^2)}{\beta^2[(N_o)_{cr}-(N_i)_{cr}]} - \frac{5[(N_o)_{cr}-\beta^2(N_i)_{cr}]}{\beta^2[(N_o)_{cr}-(N_i)_{cr}]} - 1\Bigg]$$

$$\cdot \Bigg[\frac{2A(1-\beta^2)}{\beta^2[(N_o)_{cr}-(N_i)_{cr}]} - \frac{[(N_o)_{cr}-\beta^2(N_i)_{cr}]}{\beta^2[(N_o)_{cr}-(N_i)_{cr}]} - 3\Bigg]\Bigg\}(\beta-1)^3 = 0 \qquad (113)$$

Fifth Approximation

$$360\Bigg[\frac{2A(1-\beta^2)}{\beta^2[(N_o)_{cr}-(N_i)_{cr}]} - \frac{[(N_o)_{cr}-\beta^2(N_i)_{cr}]}{\beta^2[(N_o)_{cr}-(N_i)_{cr}]} + 1\Bigg]^4$$

$$- 180\Bigg[\frac{2A(1-\beta^2)}{\beta^2[(N_o)_{cr}-(N_i)_{cr}]} - \frac{[(N_o)_{cr}-\beta^2(N_i)_{cr}]}{\beta^2[(N_o)_{cr}-(N_i)_{cr}]} + 1\Bigg]^3\Bigg[\frac{2A(1-\beta^2)}{\beta^2[(N_o)_{cr}-(N_i)_{cr}]}$$

$$- \frac{[(N_o)_{cr}-\beta^2(N_i)_{cr}]}{\beta^2[(N_o)_{cr}-(N_i)_{cr}]} - 3\Bigg](\beta-1) + \Bigg\{60\Bigg[\frac{2A(1-\beta^2)}{\beta^2[(N_o)_{cr}-(N_i)_{cr}]}$$

$$- \frac{[(N_o)_{cr}-\beta^2(N_i)_{cr}]}{\beta^2[(N_o)_{cr}-(N_i)_{cr}]} + 1\Bigg]^2\Bigg[\frac{10A(1-\beta^2)}{\beta^2[(N_o)_{cr}-(N_i)_{cr}]} - \frac{5[(N_o)_{cr}-\beta^2(N_i)_{cr}]}{\beta^2[(N_o)_{cr}-(N_i)_{cr}]} - 1\Bigg]$$

$$\cdot \Bigg[\frac{2A(1-\beta^2)}{\beta^2[(N_o)_{cr}-(N_i)_{cr}]} - \frac{[(N_o)_{cr}-\beta^2(N_i)_{cr}]}{\beta^2[(N_o)_{cr}-(N_i)_{cr}]} - 3\Bigg] - 60\Bigg[\frac{2A(1-\beta^2)}{\beta^2[(N_o)_{cr}-(N_i)_{cr}]}$$

$$- \frac{[(N_o)_{cr}-\beta^2(N_i)_{cr}]}{\beta^2[(N_o)_{cr}-(N_i)_{cr}]} + 1\Bigg]^3\Bigg[\frac{4A(1-\beta^2)}{\beta^2[(N_o)_{cr}-(N_i)_{cr}]} - \frac{2[(N_o)_{cr}-\beta^2(N_i)_{cr}]}{\beta^2[(N_o)_{cr}-(N_i)_{cr}]}$$

$$+ \frac{2b^2B[(N_o)_{cr}-\beta^2(N_i)_{cr}]}{\beta^2[(N_o)_{cr}-(N_i)_{cr}]} - 2b^2B\Bigg]\Bigg\}(\beta-1)^2 + \Bigg\{-30\Bigg[\frac{2A(1-\beta^2)}{\beta^2[(N_o)_{cr}-(N_i)_{cr}]}$$

$$- \frac{[(N_o)_{cr}-\beta^2(N_i)_{cr}]}{\beta^2[(N_o)_{cr}-(N_i)_{cr}]} + 1\Bigg]^3\Bigg[\frac{2A(1-\beta^2)}{\beta^2[(N_o)_{cr}-(N_i)_{cr}]} - \frac{[(N_o)_{cr}-\beta^2(N_i)_{cr}]}{\beta^2[(N_o)_{cr}-(N_i)_{cr}]}$$

$$+ \frac{8b^2B[(N_o)_{cr}-\beta^2(N_i)_{cr}]}{\beta^2[(N_o)_{cr}-(N_i)_{cr}]} - 4b^2B\Bigg] + 15\Bigg[\frac{2A(1-\beta^2)}{\beta^2[(N_o)_{cr}-(N_i)_{cr}]}$$

$$- \frac{[(N_o)_{cr}-\beta^2(N_i)_{cr}]}{\beta^2[(N_o)_{cr}-(N_i)_{cr}]} + 1\Bigg]^2\Bigg[\frac{2A(1-\beta^2)}{\beta^2[(N_o)_{cr}-(N_i)_{cr}]} - \frac{[(N_o)_{cr}-\beta^2(N_i)_{cr}]}{\beta^2[(N_o)_{cr}-(N_i)_{cr}]}$$

$$- 3\Bigg[\frac{34A(1-\beta^2)}{\beta^2[(N_o)_{cr}-(N_i)_{cr}]} - \frac{17[(N_o)_{cr}-\beta^2(N_i)_{cr}]}{\beta^2[(N_o)_{cr}-(N_i)_{cr}]} + \frac{2b^2B[(N_o)_{cr}-\beta^2(N_i)_{cr}]}{\beta^2[(N_o)_{cr}-(N_i)_{cr}]}$$

$$- 2b^2B - 1\Bigg] + 5\Bigg[\frac{2A(1-\beta^2)}{\beta^2[(N_o)_{cr}-(N_i)_{cr}]} - \frac{[(N_o)_{cr}-\beta^2(N_i)_{cr}]}{\beta^2[(N_o)_{cr}-(N_i)_{cr}]} + 1\Bigg]^2$$

$$\cdot\Bigg[\frac{54A(1-\beta^2)}{\beta^2[(N_o)_{cr}-(N_i)_{cr}]} - \frac{27[(N_o)_{cr}-\beta^2(N_i)_{cr}]}{\beta^2[(N_o)_{cr}-(N_i)_{cr}]} + 3\Bigg]\Bigg[\frac{4A(1-\beta^2)}{\beta^2[(N_o)_{cr}-(N_i)_{cr}]}$$

$$- \frac{2[(N_o)_{cr}-\beta^2(N_i)_{cr}]}{\beta^2[(N_o)_{cr}-(N_i)_{cr}]} + \frac{2b^2B[(N_o)_{cr}-\beta^2(N_i)_{cr}]}{\beta^2[(N_o)_{cr}-(N_i)_{cr}]} - 2b^2B\Bigg]$$

$$- 5\Bigg[\frac{2A(1-\beta^2)}{\beta^2[(N_o)_{cr}-(N_i)_{cr}]} - \frac{[(N_o)_{cr}-\beta^2(N_i)_{cr}]}{\beta^2[(N_o)_{cr}-(N_i)_{cr}]} + 1\Bigg]\Bigg[\frac{54A(1-\beta^2)}{\beta^2[(N_o)_{cr}-(N_i)_{cr}]}$$

$$- \frac{27[(N_o)_{cr}-\beta^2(N_i)_{cr}]}{\beta^2[(N_o)_{cr}-(N_i)_{cr}]} + 3\Bigg]\Bigg[\frac{10A(1-\beta^2)}{\beta^2[(N_o)_{cr}-(N_i)_{cr}]} - \frac{5[(N_o)_{cr}-\beta^2(N_i)_{cr}]}{\beta^2[(N_o)_{cr}-(N_i)_{cr}]} - 1\Bigg]$$

$$\cdot\left[\frac{2A(1-\beta^2)}{\beta^2[(N_o)_{cr}-(N_i)_{cr}]} - \frac{[(N_o)_{cr}-\beta^2(N_i)_{cr}]}{\beta^2[(N_o)_{cr}-(N_i)_{cr}]} - 3\right]\Bigg\}(\beta-1)^3$$

$$+\Bigg\{6\left[\frac{2A(1-\beta^2)}{\beta^2[(N_o)_{cr}-(N_i)_{cr}]} - \frac{[(N_o)_{cr}-\beta^2(N_i)_{cr}]}{\beta^2[(N_o)_{cr}-(N_i)_{cr}]} + 1\right]^2\left[\frac{26A(1-\beta^2)}{\beta^2[(N_o)_{cr}-(N_i)_{cr}]}\right.$$

$$\left.-\frac{13[(N_o)_{cr}-\beta^2(N_i)_{cr}]}{\beta^2[(N_o)_{cr}-(N_i)_{cr}]} + 3\right]\left[\frac{2A(1-\beta^2)}{\beta^2[(N_o)_{cr}-(N_i)_{cr}]} - \frac{[(N_o)_{cr}-\beta^2(N_i)_{cr}]}{\beta^2[(N_o)_{cr}-(N_i)_{cr}]}\right.$$

$$\left.+\frac{8b^2B[(N_o)_{cr}-\beta^2(N_i)_{cr}]}{\beta^2[(N_o)_{cr}-(N_i)_{cr}]} - 4b^2B\right] - 3\left[\frac{2A(1-\beta^2)}{\beta^2[(N_o)_{cr}-(N_i)_{cr}]}\right.$$

$$\left.-\frac{[(N_o)_{cr}-\beta^2(N_i)_{cr}]}{\beta^2[(N_o)_{cr}-(N_i)_{cr}]} + 1\right]\left[\frac{26A(1-\beta^2)}{\beta^2[(N_o)_{cr}-(N_i)_{cr}]} - \frac{13[(N_o)_{cr}-\beta^2(N_i)_{cr}]}{\beta^2[(N_o)_{cr}-(N_i)_{cr}]}\right.$$

$$\left.+3\right]\left[\frac{2A(1-\beta^2)}{\beta^2[(N_o)_{cr}-(N_i)_{cr}]} - \frac{[(N_o)_{cr}-\beta^2(N_i)_{cr}]}{\beta^2[(N_o)_{cr}-(N_i)_{cr}]} - 3\right]\left[\frac{34A(1-\beta^2)}{\beta^2[(N_o)_{cr}-(N_i)_{cr}]}\right.$$

$$\left.-\frac{17[(N_o)_{cr}-\beta^2(N_i)_{cr}]}{\beta^2[(N_o)_{cr}-(N_i)_{cr}]} + \frac{2b^2B[(N_o)_{cr}-\beta^2(N_i)_{cr}]}{\beta^2[(N_o)_{cr}-(N_i)_{cr}]} - 2b^2B - 1\right]$$

$$-\left[\frac{2A(1-\beta^2)}{\beta^2[(N_o)_{cr}-(N_i)_{cr}]} - \frac{[(N_o)_{cr}-\beta^2(N_i)_{cr}]}{\beta^2[(N_o)_{cr}-(N_i)_{cr}]} + 1\right]\left[\frac{26A(1-\beta^2)}{\beta^2[(N_o)_{cr}-(N_i)_{cr}]}\right.$$

$$\left.-\frac{13[(N_o)_{cr}-\beta^2(N_i)_{cr}]}{\beta^2[(N_o)_{cr}-(N_i)_{cr}]} + 3\right]\left[\frac{54A(1-\beta^2)}{\beta^2[(N_o)_{cr}-(N_i)_{cr}]} - \frac{27[(N_o)_{cr}-\beta^2(N_i)_{cr}]}{\beta^2[(N_o)_{cr}-(N_i)_{cr}]}\right.$$

$$\left.+3\right]\left[\frac{4A(1-\beta^2)}{\beta^2[(N_o)_{cr}-(N_i)_{cr}]} - \frac{2[(N_o)_{cr}-\beta^2(N_i)_{cr}]}{\beta^2[(N_o)_{cr}-(N_i)_{cr}]} + \frac{2b^2B[(N_o)_{cr}-\beta^2(N_i)_{cr}]}{\beta^2[(N_o)_{cr}-(N_i)_{cr}]}\right.$$

$$- 2b^2B\Bigg] + \left[\frac{26A(1-\beta^2)}{\beta^2[(N_o)_{cr}-(N_i)_{cr}]} - \frac{13[(N_o)_{cr}-\beta^2(N_i)_{cr}]}{\beta^2[(N_o)_{cr}-(N_i)_{cr}]} + 3\right]$$

$$\cdot\left[\frac{54A(1-\beta^2)}{\beta^2[(N_o)_{cr}-(N_i)_{cr}]} - \frac{27[(N_o)_{cr}-\beta^2(N_i)_{cr}]}{\beta^2[(N_o)_{cr}-(N_i)_{cr}]} + 3\right]\left[\frac{10A(1-\beta^2)}{\beta^2[(N_o)_{cr}-(N_i)_{cr}]}\right.$$

$$\left.- \frac{5[(N_o)_{cr}-\beta^2(N_i)_{cr}]}{\beta^2[(N_o)_{cr}-(N_i)_{cr}]} - 1\right]\left[\frac{2A(1-\beta^2)}{\beta^2[(N_o)_{cr}-(N_i)_{cr}]} - \frac{[(N_o)_{cr}-\beta^2(N_i)_{cr}]}{\beta^2[(N_o)_{cr}-(N_i)_{cr}]}\right.$$

$$\left.- 3\right] - 3\left[\frac{2A(1-\beta^2)}{\beta^2[(N_o)_{cr}-(N_i)_{cr}]} - \frac{[(N_o)_{cr}-\beta^2(N_i)_{cr}]}{\beta^2[(N_o)_{cr}-(N_i)_{cr}]} + 1\right]\left[\frac{88A(1-\beta^2)}{\beta^2[(N_o)_{cr}-(N_i)_{cr}]}\right.$$

$$\left.- \frac{44[(N_o)_{cr}-\beta^2(N_i)_{cr}]}{\beta^2[(N_o)_{cr}-(N_i)_{cr}]} + \frac{2b^2B[(N_o)_{cr}-\beta^2(N_i)_{cr}]}{\beta^2[(N_o)_{cr}-(N_i)_{cr}]} - 2b^2B\right]\left[\frac{10A(1-\beta^2)}{\beta^2[(N_o)_{cr}-(N_i)_{cr}]}\right.$$

$$\left.- \frac{5[(N_o)_{cr}-\beta^2(N_i)_{cr}]}{\beta^2[(N_o)_{cr}-(N_i)_{cr}]} - 1\right]\left[\frac{2A(1-\beta^2)}{\beta^2[(N_o)_{cr}-(N_i)_{cr}]} - \frac{[(N_o)_{cr}-\beta^2(N_i)_{cr}]}{\beta^2[(N_o)_{cr}-(N_i)_{cr}]} - 3\right]$$

$$+ 3\left[\frac{2A(1-\beta^2)}{\beta^2[(N_o)_{cr}-(N_i)_{cr}]} - \frac{[(N_o)_{cr}-\beta^2(N_i)_{cr}]}{\beta^2[(N_o)_{cr}-(N_i)_{cr}]} + 1\right]^2\left[\frac{88A(1-\beta^2)}{\beta^2[(N_o)_{cr}-(N_i)_{cr}]}\right.$$

$$\left.- \frac{44[(N_o)_{cr}-\beta^2(N_i)_{cr}]}{\beta^2[(N_o)_{cr}-(N_i)_{cr}]} + \frac{2b^2B[(N_o)_{cr}-\beta^2(N_i)_{cr}]}{\beta^2[(N_o)_{cr}-(N_i)_{cr}]} - 2b^2B\right]\left[\frac{4A(1-\beta^2)}{\beta^2[(N_o)_{cr}-(N_i)_{cr}]}\right.$$

$$\left.- \frac{2[(N_o)_{cr}-\beta^2(N_i)_{cr}]}{\beta^2[(N_o)_{cr}-(N_i)_{cr}]} + \frac{2b^2B[(N_o)_{cr}-\beta^2(N_i)_{cr}]}{\beta^2[(N_o)_{cr}-(N_i)_{cr}]} - 2b^2B\right]$$

$$+ 9\left[\frac{2A(1-\beta^2)}{\beta^2[(N_o)_{cr}-(N_i)_{cr}]} - \frac{[(N_o)_{cr}-\beta^2(N_i)_{cr}]}{\beta^2[(N_o)_{cr}-(N_i)_{cr}]} + 1\right]^2\left[\frac{2A(1-\beta^2)}{\beta^2[(N_o)_{cr}-(N_i)_{cr}]}\right.$$

$$- \frac{[(N_o)_{cr}-\beta^2(N_i)_{cr}]}{\beta^2[(N_o)_{cr}-(N_i)_{cr}]} - 3\Bigg]\Bigg[\frac{24A(1-\beta^2)}{\beta^2[(N_o)_{cr}-(N_i)_{cr}]} - \frac{12[(N_o)_{cr}-\beta^2(N_i)_{cr}]}{\beta^2[(N_o)_{cr}-(N_i)_{cr}]}$$

$$+ \frac{8b^2B[(N_o)_{cr}-\beta^2(N_i)_{cr}]}{\beta^2[(N_o)_{cr}-(N_i)_{cr}]} - 4b^2B\Bigg] - 18\Bigg[\frac{2A(1-\beta^2)}{\beta^2[(N_o)_{cr}-(N_i)_{cr}]}$$

$$- \frac{[(N_o)_{cr}-\beta^2(N_i)_{cr}]}{\beta^2[(N_o)_{cr}-(N_i)_{cr}]} + 1\Bigg]^3\Bigg[\frac{12b^2B[(N_o)_{cr}-\beta^2(N_i)_{cr}]}{\beta^2[(N_o)_{cr}-(N_i)_{cr}]} - 2b^2B\Bigg]\Bigg\}(\beta-1)^4 = 0$$

(114)

Computation of the sixth approximation is unnecessary since it can be shown that the fifth approximation yields acceptable results (see Section 5, Chapter V).

Equations (111-114), each being self-contained, represent the approximate critical buckling criteria for an annular sandwich panel constrained by boundary conditions (74) and (75) and subjected to uniform radial compressive loads, N_i and N_o, along the inner and outer edges, respectively.

4. Numerical Results and Discussions

Once the inner compressive load, N_i, is prescribed to be some multiple of the outer compressive load, N_o, the approximate critical conditions given in the previous section are completely defined by three dimensionless parameters: $(N_o/A)_{cr}$, b^2B, and β. Thus we obtain algebraic polynomials in $(N_o/A)_{cr}$ which increase in degree as the order of approximation increases (ranging from first degree in the second approximation to fourth degree in the fifth approximation). For

obvious reasons we consider only the lowest positive value of $(N_o/A)_{cr}$ satisfying each polynomial.

Three possible loading conditions are analyzed in the present work: (1) $N_o = N_i$, (2) $N_o = 0$, and (3) $N_i = 0$. However, it should be noted that the techniques employed in these examples are applicable for any ratio of N_o to N_i.

$N_o = N_i$

If the inner and outer axial compressive loads are equal, then the exact solution is given by equation (87) in conjunction with Table 2. Thus, the approximation techniques employed in the previous section are unnecessary. For this case, Figure 3 shows the existing relation between $(N_o/A)_{cr}$ and δ for various values of b^2B.

$N_o = 0$

If the inner edge alone is subjected to axial compression, then, since equations (111-114) yield no positive values of $(N_o/A)_{cr}$, it can be concluded that buckling never occurs. This would seem reasonable, since, from equations (63-65), such a reduction results in a relatively large tensile $\underline{N}_{\theta\theta}$ compared with a relatively small compressive $\underline{N}_{rr}$. Analogously, for a rectangular single-layer panel subjected to compression along opposite edges and tension along adjacent edges, Timoshenko [3] has shown that a large tensile load will prevent a significantly smaller compressive load from causing instability. However, we must keep in mind that, while $\underline{N}_{xx}$ and $\underline{N}_{yy}$ can be varied independently in a rectangular panel, such is not the case

for a circular or annular panel, since the following equilibrium condition must be maintained:

$$\frac{d\underline{N}_{rr}}{dr} + \frac{\underline{N}_{rr} - \underline{N}_{\theta\theta}}{r} = 0 \qquad (56)$$

$\underline{N_i = 0}$

If only the outer edge is subjected to axial compression, the second approximation, equation (111), can be solved explicitly for $(N_o/A)_{cr}$:

$$\left(\frac{N_o}{A}\right)_{cr} = \frac{2(1+\beta)(3-\beta)}{3+2\beta+3\beta^2} \qquad (115)$$

Since b^2B does not enter into relation (115), it is obvious that further approximations must be considered.

Due to the complexity of the calculations involved, a graphical solution is employed for the succeeding approximations. In Figure 4 approximations two through five are compared by plotting $(N_o/A)_{cr}$ versus β for various values of b^2B.

All quantities appearing in Figures 3 and 4 are dimensionless. Buckling loads may be obtained in the appropriate dimensions by using the first of relations (73).

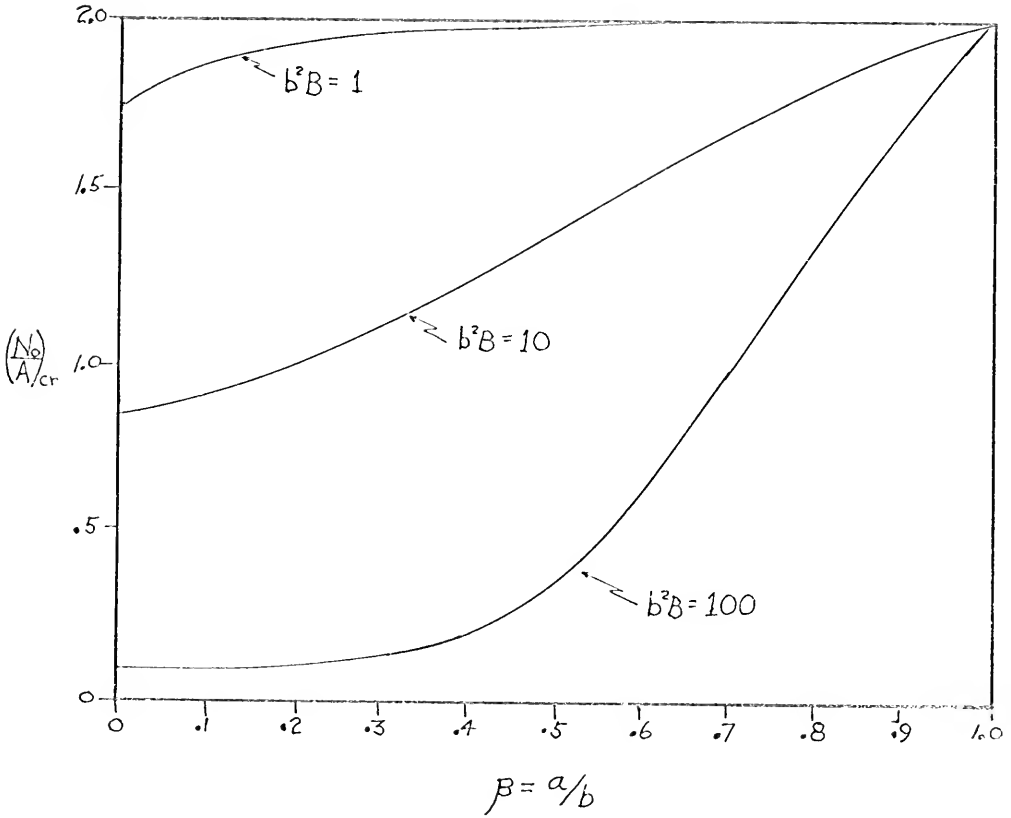

Figure 3. Minimum Critical Values of (N_o/A) for $N_o = N_i$

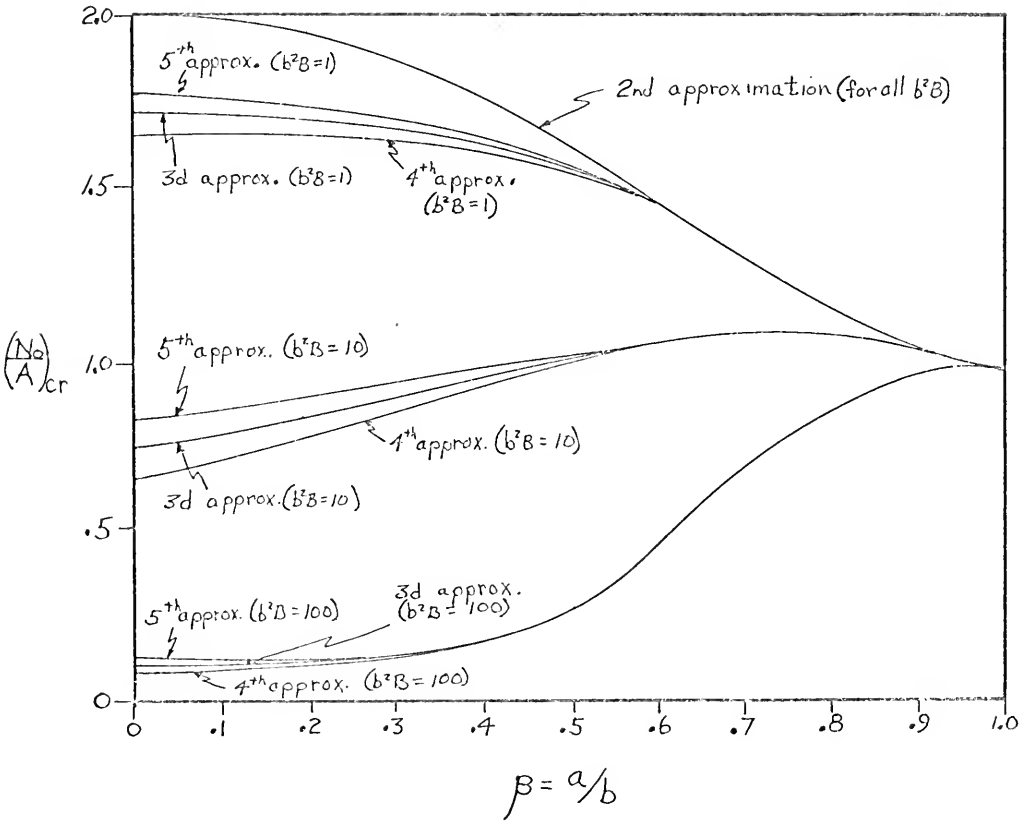

Figure 4. Minimum Critical Values of (N_o/A) for $N_i = 0$

The following conclusions may be drawn from Figures 3 and 4:

1. All critical values of (N_o/A) are less than or equal to two. (Figures 3 and 4)
2. As the value of b^2B approaches infinity, the results approach those obtained for a single-layer panel in equation (89). (Figure 3)
3. For $\beta = 0$, the present theory coincides with Huang and Ebcioglu's results (equation (88)) for a circular sandwich panel. (Figures 3 and 4)
4. The second approximation in Figure 4 is the exact solution for $b^2B = 0$.
5. An annular sandwich panel subjected to axial compression along the outer boundary becomes stronger if an equal compressive load is also applied along the inner edge. (Figures 3 and 4)
6. In Figure 4, the third approximations yield more accurate results than the fourth approximations. This peculiarity and the error bound associated with the fifth approximations will be discussed in the next section.
7. A dual response is apparent in Figure 4. As the hole increases in relative size, the panel may become weaker or stronger depending on the value of b^2B and the range of β being considered. Such a behavior is possible because both the shear and the bending stiffness of a sandwich panel enter into the analysis. An annular single-layer panel, which can be described by only two dimensionless parameters, exhibits no such dual response.

8. If buckling loads for values of b^2B or ratios of N_o to N_i, not considered in Figures 3 and 4, are required, equation (114) may be used directly. However, when considering only values of β greater than one-half, the third approximation, equation (112), yields acceptable results. (Figure 4)

The above conclusions are valid only for the special case in which boundary conditions (74) and (75) are applied.

5. Error Bound

Since we chose to expand the solution of equation (93) about the point $\eta = 1$, the speed of convergence of the series solution obtained, equation (104), depends on the proximity of the entire annular region to that point. Clearly, as the hole increases in size (β approaches one), the solution converges more rapidly. This fact is evident from Figure 4, and also from equation (107). Indeed, it can be concluded that the speed of convergence is the slowest when $\beta = 0$.

From equations (111-114) the approximate critical buckling parameter, $(N_o/A)_{cr}$, can be solved explicitly for the degenerate case of $\beta = 0$. The results of this simplification are found in Table 3.

However, for this special case, the exact solution (reproduced here for convenience) is available from Section 1 of this chapter:

$$\left(\frac{N_o}{A}\right)_{cr} = \frac{14.684}{b^2B + 7.342} \qquad (88)$$

TABLE 3

APPROXIMATE VALUES OF $(N_o/A)_{cr}$
FOR $\beta = 0$

Order of Approximation	$(N_o/A)_{cr}$
First	(No results)
Second, equation (111)	2
Third, equation (112)	$\frac{12}{b^2B + 6}$
Fourth, equation (113)	$\frac{10}{b^2B + 5}$
Fifth, equation (114)	$\frac{15}{b^2B + 7.5}$

If we compare equation (88) with Table 3, it can be concluded that the fifth approximation, for $\beta = 0$, is within 2.2 per cent of the exact solution, even for large values of b^2B. And, since the series solution converges more rapidly for other values of β, equation (114) yields results that lie within 2.2 per cent of the exact solution for all values of b^2B and β.

Following the same reasoning outlined above, it can be concluded that the third approximation yields more accurate results than the fourth approximation. This peculiarity can be easily verified by expanding a series solution of equation (78) about the point $r = b$ ($\xi = 0$). If this is done, the resulting approximations, as expected, coincide exactly with those listed in Table 3.

6. Remarks on Convergence

The series solution of an ordinary differential equation possesses a radius of convergence at least as great as the distance from the point of expansion to the nearest singularity [19].

Equation (93) possesses two regular singularities, one at $\eta = 0$, and another at $(N\eta^2+1) = 0$; and its solution was expanded about the point $\eta = 1$. Therefore, it must be demonstrated that these singularities do not inhibit the validity of our solution throughout the entire annular region of the panel.

Referring to Figure 5, it becomes obvious that the singularity at $\eta = 0$ does not restrict the required radius of convergence, regardless of the value of β. It is therefore necessary only to show that the singularity occurring at $(N\eta^2+1) = 0$, lies outside the annular region and its reflection illustrated in Figure 5, for all values of β.

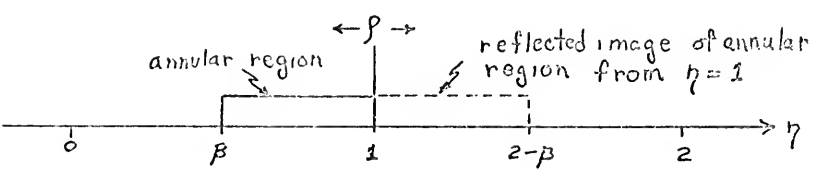

Figure 5. Radius of Convergence

With the aid of equation (108), $(N\eta^2+1) = 0$ becomes:

$$\frac{\eta^2}{\beta^2(N_o-N_i)}\,[2A(1-\beta^2) - (N_o-\beta^2 N_i)] + 1 = 0 \qquad (116)$$

Therefore, the position of the singularity associated with equation (116) depends on the value of the critical buckling load which becomes known only after the solution is obtained.

For the particular case in which $N_i = 0$, (116) is satisfied if

$$\left(\frac{N_o}{A}\right)_{cr} = \frac{2(1-\beta)^2\eta^2}{\eta^2 - \beta^2} \tag{117}$$

However, from equation (115) and Figure 4, it is apparent that, for $N_i = 0$,

$$\left(\frac{N_o}{A}\right)_{cr} \leq \frac{2(1+\beta)(3-\beta)}{3 + 2\beta + 3\beta^2} \tag{118}$$

for all values of b^2B.

In order that conditions (117) and (118) be satisfied simultaneously, η^2 must satisfy the following inequality:

$$\eta^2 \geq \frac{2(3-\beta)\beta^2}{[2(3-\beta) - 2(1-\beta)(3+2\beta+3\beta^2)]} \tag{119}$$

Equation (119) constrains η^2 to be greater than $(2-\beta)^2$ for all values of β ranging from 0 to 1. It can therefore be concluded that the singularity associated with equation (117) lies outside the annular region and its reflection illustrated in Figure 5. Similarly, it can also be shown that, for $N_o = 0$, the singularity associated with equation (116) lies outside this critical region.

Thus, the radius of convergence, ρ, of the series solution of equation (93), expanded about the point $\eta = 1$, is:

$$\rho \geq 1 - \beta \tag{120}$$

which, as illustrated in Figure 5, is large enough to encompass the entire annular region of the panel.

Care must be taken, however, when imposing boundary conditions other than (74) and (75) on the solution of equation (93). Critical loads resulting from boundary conditions or ratios of N_o to N_i not considered in the present work may satisfy equation (116) within the needed radius of convergence. It would then become necessary to either expand the solution of equation (93) about some other point, or employ the techniques associated with analytic continuation. The difficulties encountered in the latter approach would be enormous.

CHAPTER VI

CONCLUSION

The present work investigates the buckling of annular sandwich panels. Equilibrium equations and boundary conditions satisfying continuity requirements were derived in cartesian coordinates, using the theorem of minimum potential energy. These equations were then transformed into polar coordinates through the application of tensor analysis.

Axisymmetric buckling being assumed, and the bending rigidity of the faces being neglected, the equilibrium equations were uncoupled by using a modified technique. The governing equations were then compared with existing theories for single-layer annular panels [11,12] and circular sandwich panels [10].

For the general problem of an annular sandwich panel subjected to unequal inner and outer compressive loads, and constrained by boundary conditions similar to those employed by Olsson [12], a power series solution was obtained. This series was shown to possess a radius of convergence of sufficient magnitude. Successive approximations were then computed, and a graphical solution was employed for various ratios of outer to inner compressive loads. Results from the fifth approximation, which were shown to be within 2.2 per cent of the exact solution, were compared with those obtained from earlier theories [10,11,12].

The present work represents the first attempt to analyze the stability of annular sandwich panels. Further extensions of the present theory may be carried out by including the effects of the bending rigidity of the faces or considering boundary conditions other than those employed here. Furthermore, continued efforts should be directed toward obtaining a solution to the unsymmetric buckling problem. In this way, the assumption of axisymmetric buckling could be justified, and the problems associated with angular dependent loading functions could be analyzed.

BIBLIOGRAPHY

1. F. J. Plantema, "Sandwich Construction," Wiley and Sons, New York, 1966.

2. S. Timoshenko and S. Woinowsky-Krieger, "Theory of Plates and Shells," 2nd ed., McGraw-Hill, New York, 1959.

3. S. Timoshenko and J. Gere, "Theory of Elastic Stability," 2nd ed., McGraw-Hill, New York, 1961.

4. N. J. Hoff, "Bending and Buckling of Rectangular Sandwich Plates," NACA TN 2225, 1950.

5. A. C. Eringen, "Bending and Buckling of Rectangular Sandwich Plates," Proc. First U.S. Natl. Cong. Appl. Mech., 1951, pp. 381-390.

6. C. C. Chang and I. K. Ebcioglu, "Elastic Instability of Rectangular Sandwich Panel of Orthotropic Core with Different Face Thicknesses and Materials," Transactions of the American Society of Mechanical Engineers, J. App. Mech., Vol. 27, No. 3, September 1960, pp. 474-480.

7. S. J. Kim, "Symmetric and Antisymmetric Buckling of Sandwich Panels," Doctoral Dissertation, Dept. Eng. Sci. and Mech., University of Florida, 1969.

8. E. Reissner, "Small Bending and Stretching of Sandwich-Type Shells," NACA TN 1832, 1949.

9. M. Zaid, "Symmetrical Bending of Circular Sandwich Plates," Proc. of the 2nd U.S. Natl. Cong. Appl. Mech., 1951, pp. 413-422.

10. J. C. Huang and I. K. Ebcioglu, "Circular Sandwich Plate under Radial Compression and Thermal Gradient," AIAA Journal, Vol. 3, No. 6, June 1965, pp. 1146-1148.

11. E. Meissner, "Uber das Knicken kreisringförmiger Scheiben," Schweiz. Bauztg., Vol. 101, 1933, pp. 87-89.

12. G. Olsson, "Knickung der Kreisringplatte von quadratisch veränderlicher Steifigkeit," Ingr.-Arch., Vol. 9, 1938, pp. 205-214.

13. C. C. Chang and I. K. Ebcioglu, "Thermoelastic Behavior of a Simply Supported Sandwich Panel Under Large Temperature Gradient and Edge Compression," J. Aero. Sci., Vol. 28, No. 6, June 1961, pp. 480-492.

14. I. S. Sokolnikoff, "Mathematical Theory of Elasticity," 2nd ed., McGraw-Hill, New York, 1956.

15. Y. C. Fung, "Foundations of Solid Mechanics," Prentice-Hall, Englewood Cliffs, New Jersey, 1965.

16. A. J. McConnell, "Applications of Tensor Analysis," Dover Publications, Inc., New York, 1957.

17. S. Timoshenko, "Strength of Materials," Part II, D. van Nostrand, Princeton, New Jersey, 1956.

18. F. B. Hildebrand, "Advanced Calculus for Applications," Prentice-Hall, Englewood Cliffs, New Jersey, 1962.

19. L. R. Ford, "Differential Equations," 2nd ed., McGraw-Hill, New York, 1955.

BIOGRAPHICAL SKETCH

Amelio John Amato was born in Newark, New Jersey, on January 20, 1944. He was graduated from Seton Hall Preparatory School in June, 1962. In June, 1966, he received the degree of Bachelor of Science in Mechanical Engineering from Newark College of Engineering (New Jersey).

In September of the same year he entered the Department of Engineering Science and Mechanics at the University of Florida as a National Defense and Education Act, Title IV Fellow. Here, in August, 1967, he received the degree of Master of Science in Engineering prior to pursuing the degree of Doctor of Philosophy.

This dissertation was prepared under the direction of the chairman of the candidate's supervisory committee and has been approved by all members of that committee. It was submitted to the Dean of the College of Engineering and to the Graduate Council, and was approved as partial fulfillment of the requirements for the degree of Doctor of Philosophy.

June, 1970

Dean, College of Engineering

Dean, Graduate School

Supervisory Committee:
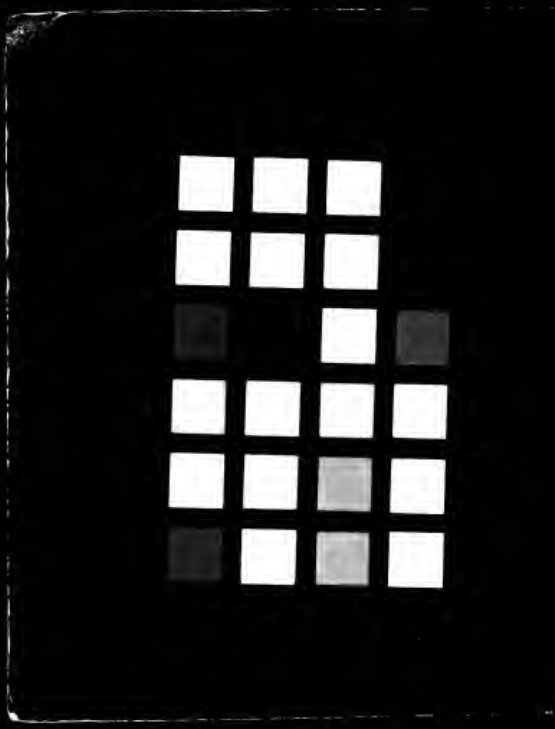
Chairman